ELECTROSEA®
EXPERTS IN MARINE GROWTH PREVENTION SYSTEMS®

ELECTROSTRAINER® PRO

ES-200-PRO / ES-150-PRO

INSTALLATION AND OPERATION MANUAL

TABLE OF CONTENTS

INTRODUCTION

Table of Contents	2
ElectroSea® and ElectroStrainer® Pro	3
Parts Reference	4-7

INSTALLATION

Pre-Installation Checklist	8
Plan Your Installation: Plumbing	9
Plan Your Installation: Electrical	10
Step 01: Optional Control Head Rotation	11-13
Step 02: Mount Canister	14-15
Step 03: Connect Canister to Thru-Hull	16
Step 04: Connect Canister to Flow Sensor	17-18
Step 05: Connect Chlorinated Return Line	19-20
Step 06: Prepare Remote Display	21
Step 07: Mount and Connect Remote Display	22-25
Step 08: Make Electrical Connections	26-28
Step 09: Secure Electrical Connections	29
Step 10: Finish Installation	30

SPECIFICATIONS

Specifications	31

OPERATION

Control Head Keypad Functions	32
Operating Modes	32
Remote Display	32
Normal Operation	33
Optimum Flow Rate	33
Smart Strainer Flow Alert®	34
Flow Rate Units	35
Firmware Updates	35
Cell Indicator	36
Optimal Performance	37
Seawater Pumps	37
ClearVis® Flow Sensor	37
Maintenance Lid	37
Strainer Maintenance	38-44
Periodic Inspection	44
Operating Modes	45
Troubleshooting	46
Error Codes	47

Please read these instructions carefully and follow all instructions, guidelines, and warnings stated in this product manual to guarantee the correct installation, usage, and maintenance at all times. Keep instructions with product for future reference.

By using the product, you hereby affirm that you have thoroughly read and understood all instructions, guidelines, and warnings contained herein. You acknowledge and consent to comply with the terms and conditions set forth in this document. It is understood that the product shall be used solely for its intended purpose and application, adhering to the instructions, guidelines, and warnings as specified in this product manual and in accordance with all relevant laws and regulations.

Failure to read and adhere to the provided instructions and warnings may lead to potential injuries to yourself and others, damage to the product, or harm to surrounding property. Failure to read and adhere to the provided instructions and warnings may also void the Warranty. Please be aware that this product manual, including its instructions, guidelines, and warnings, may be subject to modifications and updates. To access the most current product information, visit www.electrosea.com.

ELECTROSEA®

ElectroSea, Experts in Marine Growth Prevention Systems®, provides innovative seawater management systems for superior performance and protection against biofouling. Our entrepreneurial spirit, standard of excellence, and unwavering dedication to customer service have firmly established ElectroSea as one of the most trusted leaders in marine products today.

ELECTROSTRAINER® PRO

ElectroStrainer Pro is a revolutionary seawater biofouling-prevention device, a sea strainer, and a smart seawater flow-monitoring unit all combined into a single system.

- **ElectroStrainer Pro is a Biofouling-Prevention Device:** ElectroStrainer Pro generates a safe and effective low level of chlorine from seawater to protect the entire seawater system. ElectroStrainer Pro contains a mixed metal-oxide cell that catalyzes an electrochemical reaction to generate chlorine naturally from the seawater passing through it. No chemical additives are required.

- **ElectroStrainer Pro is a Sea Strainer:** Typical sea strainers become clogged as bioslime, algae, and barnacles build up over time in the sea strainer basket pores. ElectroStrainer Pro solves this problem by generating chlorine directly inside its Strainer Basket. This precise, low level of chlorine prevents unwanted marine growth. Strainer Basket pores remain open, free, and clear so protected seawater can pass downstream to cooling equipment and decrease the frequency of Strainer Basket cleaning. Not intended to filter sand or other fine particles..

- **ElectroStrainer Pro is a Smart Seawater Flow-Monitoring System:** ElectroStrainer Pro provides real-time flow monitoring with Smart Strainer Flow Alert® and automatically notifies you to check the Strainer Basket if it requires attention. ElectroStrainer Pro monitors vessel seawater flow 24/7/365 days a year and displays the seawater flow rate in real time.

	ES-200-PRO	ES-150-PRO
Flow Rate	Optimal Flow: 20-40 gpm (75-151 lpm) Min/Max Flow: 10-75 gpm (38-284 lpm)	Optimal Flow: 12-30 gpm (45-114 lpm) Min/Max Flow: 8-50 gpm (30-189 lpm)
Replacement Cell Part Number	300074-042	300074-041

ELECTROSTRAINER® PRO EXPLODED VIEW

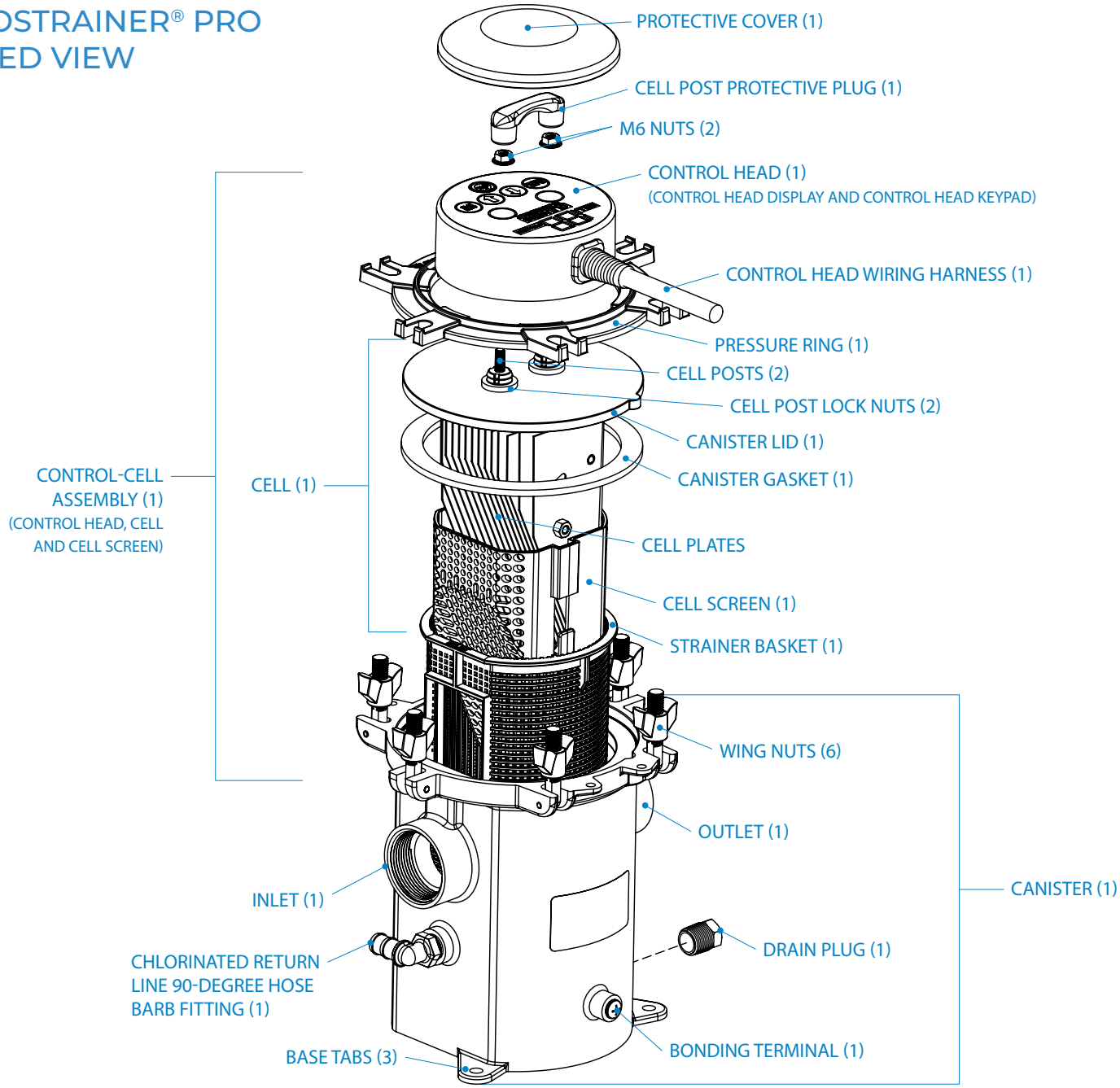

WHAT'S IN THE BOX

(1) ELECTROSTRAINER® PRO CANISTER WITH CONTROL-CELL ASSEMBLY

(1) REMOTE DISPLAY WITH BLACK MOUNTING BRACKET

(1) REMOTE DISPLAY WHITE MOUNTING BRACKET

(1) 30' (9 M) REMOTE DISPLAY COMMUNICATION CABLE

(1) 30' (9 M) POWER CABLE

(1) TOP-SIDE MOUNTING BRACKET

(1) BOTTOM-SIDE MOUNTING BRACKET

(1) $^3/_4$" x 10' CHLORINATED RETURN LINE TUBING

(1) $^1/_2$" to $^1/_2$" BALL VALVE

(1) $1^1/_2$" TEE FITTING

(1) 3/4" CHLORINATED RETURN LINE CLAMP

(4) CHLORINATED RETURN LINE HOSE CLAMPS

(1) M8 MACHINE SCREW

(3) M6 MACHINE SCREWS

(2) M5 MACHINE SCREWS

(4) #10 X 1" 316 STAINLESS-STEEL MOUNTING SCREWS

(10) #12 MOUNTING SCREWS

(4) #8-32 X $1^1/_2$" MOUNTING SCREWS

(1) M6 316 STAINLESS-STEEL NYLON-INSERT LOCKNUT

(1) CHLORINATED RETURN LINE PLUG

PARTS REFERENCE

WHAT'S IN THE BOX

(2) MOUNTING CLIPS

(1) 10-MM T-HANDLE SOCKET WRENCH

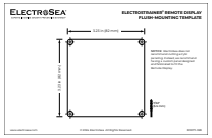

(1) REMOTE DISPLAY FLUSH-MOUNTING TEMPLATE

ES-200-PRO ONLY

(1) 2" CLEARVIS® FLOW SENSOR

(1) 2" TEE FITTING

(2) 2" MALE HOSE BARB FITTINGS

(2) 2" FEMALE HOSE BARB FITTINGS

ES-150-PRO ONLY

(1) 1$^1/_2$" CLEARVIS FLOW SENSOR

(1) 1$^1/_4$" TEE FITTING

(2) 1$^1/_2$" MALE HOSE BARB FITTINGS

(2) 1$^1/_2$" FEMALE HOSE BARB FITTINGS

OPTIONAL EQUIPMENT AND REPLACEMENT PARTS (ORDERED SEPARATELY)

ADDITIONAL REMOTE DISPLAY KIT
PART NO. 200071-011

BLACK REMOTE DISPLAY MOUNTING BRACKET
PART NO. 306071-013-B

WHITE REMOTE DISPLAY MOUNTING BRACKET
PART NO. 306071-013-W

100' (30 M) EXTENDED REMOTE DISPLAY COMMUNICATION CABLE
PART NO. 308071-007

6' (1.8 M) CLEARVIS® FLOW SENSOR EXTENSION CABLE
PART NO. 308071-009

MAINTENANCE LID
ES-200-PRO: PART NO. 306074-014
ES-150-PRO: PART NO. 306074-033

REPLACEMENT CELL
ES-200-PRO: PART NO. 300074-042
ES-150-PRO: PART NO. 300074-041

STRAINER BASKET REPLACEMENT
ES-200-PRO: PART NO. 306074-011
ES-150-PRO: PART NO. 306074-001

CANISTER GASKET REPLACEMENT
ES-200-PRO: PART NO. 305074-002
ES-150-PRO: PART NO. 305055-001

ADDITIONAL ITEMS YOU'LL NEED (NOT INCLUDED)

PARTS

- Non-PTFE sealant (Blue 75™ Thread Sealant)
- Marine-grade hose
- Stainless-steel hose clamps
- Plumbing fittings (elbows, couplers, etc.)
- Flexible hose hanger, hose strap, or hose-support bracket
- ¼" crimped ring terminal
- Bonding wire
- Electrical connectors
- Circuit protection (if not supplied by vessel)
- Zip ties/saddles

TOOLS

- Impact drill and drill bits
- Screwdrivers and nutdrivers
- Blue tape/markers
- Tape measure
- Hose cutter (tool or razor)
- Torch
- Misc sockets, wrenches, and pipe wrenches
- Pliers, side cutters, crescent wrench, adjustable, etc.
- Wire stripper crimper
- Multimeter

PRE-INSTALLATION CHECK LIST

DESCALING SEAWATER PIPES, HOSES AND THRU-HULL FITTINGS

If the seawater intake, thru-hull, pipes, hoses, or fittings are impacted with barnacles, biofouling, or bioslimes, then ElectroSea® recommends that the boat is professionally descaled prior to installation of the ElectroStrainer® Pro. By starting with descaled, clean, free-flowing seawater lines, you will realize the full benefit of the ElectroStrainer Pro.

Descaling is generally not necessary for new vessels that have not been operating in seawater for an extended period of time.

NOTICE: DO NOT perform acid descaling after the ElectroStrainer Pro has been installed. Descaling acids will damage the ElectroStrainer Pro and void the Warranty. See page 37 for details.

NOTICE: Failure to descale your seawater system before ElectroStrainer Pro installation could result in biofouling material getting lodged in downstream cooling equipment.

SEAWATER PUMP CONDITION

Check the seawater pump to make sure it is in good condition and operating properly prior to installing ElectroStrainer Pro. A worn impeller or damaged pump head or motor could result in inadequate seawater flow to downstream equipment, such as air conditioners or chillers. ElectroStrainer Pro does not regulate the seawater flow rate as this is determined solely by the seawater pump. ElectroStrainer Pro will provide real-time measurement of seawater flow.

NOTICE: Inadequate or low seawater flow may damage the cooling system and other components that depend on this water for proper operation. It is the owner's responsibility to monitor the vessel's seawater flow rate and perform any necessary maintenance.

SAFETY PRECAUTIONS

WARNING: READ THIS MANUAL COMPLETELY BEFORE INSTALLING AND OPERATING THIS UNIT. IMPROPER INSTALLATION CAN RESULT IN UNSATISFACTORY PERFORMANCE, PREMATURE FAILURE, AND DAMAGE TO SYSTEMS IN THE SEAWATER CIRCUIT AND/OR TO THE VESSEL.

The following safety alert symbols are used to alert you to potential physical injury hazards. Obey all safety messages that follow these symbols to avoid possible injury or death.

DANGER! This symbol indicates a hazardous situation that, if not avoided, will result in death or serious injury.

WARNING: This symbol indicates a hazardous situation that, if not avoided, could result in death or serious injury.

CAUTION: This symbol indicates a hazardous situation that, if not avoided, could result in minor or moderate injury.

NOTICE: This symbol is used to address practices not related to physical injury and indicates additional information that is not related to physical injury.

For alternate installation configurations, including placing the ElectroStrainer Pro Canister after the seawater pump, please visit www.electrosea.com.

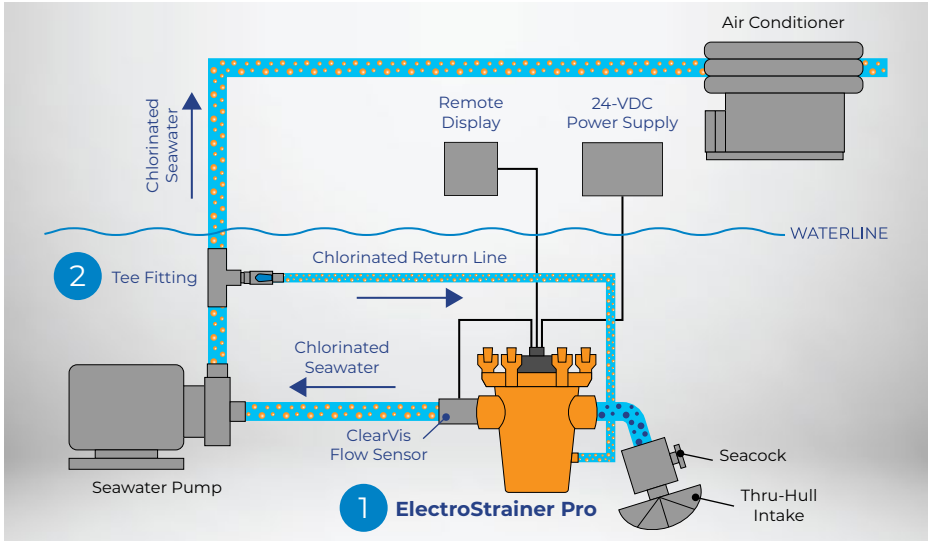

1 The ElectroStrainer® Pro should be installed before the pump and before any seawater-cooled equipment, such as air conditioners, chillers, etc.

NOTICE: If there is an existing seawater strainer, then remove it and install the ElectroStrainer Pro in the same location or after the seacock, as close to it as possible. DO NOT remove strainers that are directly connected to a pump or a component of a pump.

2 A Chlorinated Return Line will be connected **DOWNSTREAM** of the ClearVis® Flow Sensor and **DOWNSTREAM** of the seawater pump on the pressure/outlet side to return a small amount of chlorinated seawater directly to the ElectroStrainer Pro Canister. This will help prevent growth at the inlet of the strainer basket. See pages 19-20 for details.

NOTICE: The source for the Chlorinated Return Line must be connected on the pressure side of the seawater pump and after the ClearVis Flow Sensor. DO NOT connect it to the inlet side of the seawater pump or chlorinated seawater will not flow through the Chlorinated Return Line.

WARNING: DO NOT USE DESCALING SOLUTIONS, ACIDS, OR CLEANING CHEMICALS AFTER ELECTROSTRAINER PRO HAS BEEN INSTALLED.

WARNING: Shut off the vessel's seawater intake pump, pump circuit breaker, and seacock shut-off valves before installation. Turn off ALL seacock shut-off valves in the seawater circuit at or below the waterline. This includes any output seacocks to prevent back siphoning.

WARNING: For hose connections, use flexible marine-grade hose and double clamp with two (2) stainless-steel hose clamps, reversing the clamps. Failure to properly secure seawater connections could result in sinking the vessel.

WARNING: DO NOT exceed the ElectroStrainer Pro pressure specifications.

WARNING: PTFE should not be used on plastic connections. Avoid overtightening parts as they may crack and result in sinking the vessel.

WARNING: All seawater plumbing connections must be performed by a qualified marine installation professional.

NOTICE: DO NOT decrease seawater flow below the manufacturer's specifications for cooling equipment.

NOTICE: Limit the use of 90° elbows as they restrict flow and cause pressure drop.

NOTICE: The ElectroStrainer Pro Canister is made of 2205 Duplex stainless steel for corrosion resistance. DO NOT connect dissimilar metals to it if possible.

NOTICE: Use only original parts supplied by ElectroSea®. They are made of special titanium, stainless, and other high-quality materials.

NOTICE: DO NOT use ElectroStrainer Pro with livewell or watermaker systems. The chlorine produced by ElectroStrainer Pro can damage reverse osmosis membranes in watermakers and may be harmful to live bait in livewells.

PLAN YOUR INSTALLATION: ELECTRICAL

1. The ElectroStrainer® Pro includes a 30’ (9-m) Power Cable. It should be connected from the Control Head to an always-on 24-VDC power supply. This power-supply source should include a 7-Ampere circuit breaker (or next available higher amperage circuit breaker, max 10 A).[1] All wiring must be performed according to the appropriate electrical standards (i.e., ABYC). See page 28 for details.

WARNING: DO NOT connect the ElectroStrainer Pro directly to a battery bank or other power source that is subject to high-voltage transients.

NOTICE: If the 24-VDC power-supply distance exceeds the length of the 30’ (9-m) ElectroStrainer Pro Power Cable, then the cable can be spliced to a longer cable. Larger gauge wire may be required according to the appropriate electrical standards (i.e., ABYC). Consult a professional electrician.

2. The Canister must be connected to the boat’s bonding circuit. All wiring must be performed according to the appropriate electrical standards (i.e., ABYC). See page 26 for details.

[1]Recommended circuit breaker per ABYC standards. Circuit breaker size and/or location may be different depending on local requirements. Follow all local standards where required.

STEP 01: OPTIONAL CONTROL HEAD ROTATION

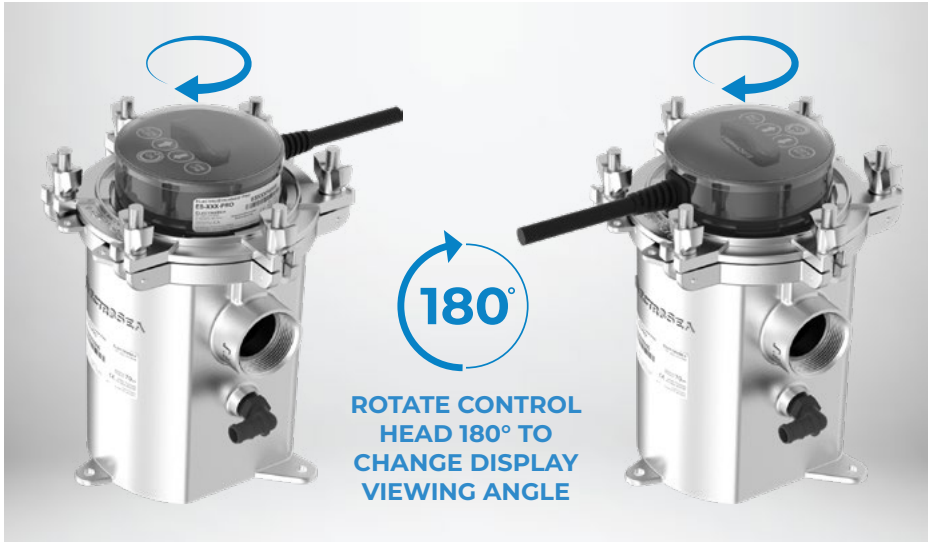

The Control Head can be oriented on the Canister so it is facing the front or the back. This allows the user to view the display from the “front” and have the Control Head Wiring Harness routed towards the “back.”

When determining the mounting orientation, ensure that the Control Head Wiring Harness has adequate space and that there is not excessive force, stress, or kinking of the cable.

1. To change the orientation of the Control Head, lift the clear Protective Cover straight up to remove it. Set aside.

STEP 01: OPTIONAL CONTROL HEAD ROTATION

2 Lift up on the black gasket to remove the Cell Post Protective Plug. DO NOT use a screwdriver or other tool to pry up the plug as you will damage the Control Head Keypad.

3 Use the provided 10-mm T-Handle Socket Wrench to loosen the two (2) M6 Nuts by turning them counterclockwise.

Use caution as the M6 Nuts will now be loose in the recessed area of the Control Head. If you turn the Control Head over at any time, the M6 Nuts will fall out.

NOTICE: DO NOT UNSCREW the two (2) Cell Posts. They have a watertight seal that is set at the factory.

NOTICE: DO NOT use any tools on the two (2) Cell Post Lock Nuts.

NOTICE: ANY USE OF TOOLS OR REMOVAL OF CELL POSTS WILL VOID THE WARRANTY.

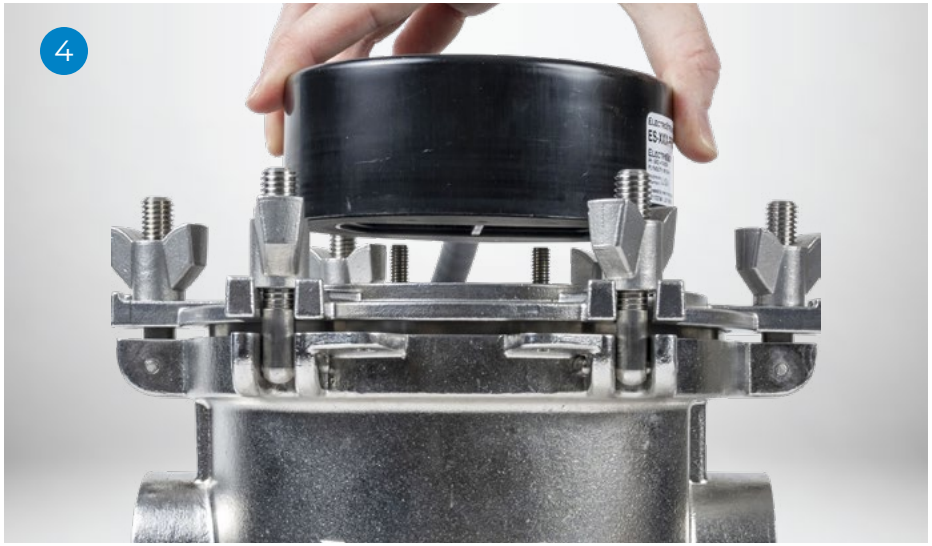

4 Lift the Control Head straight up and rotate it 180° so that it is facing the direction you desire.

NOTICE: The Control Head is water resistant. It is NOT waterproof and should never be submerged in water. If it gets wet, then wipe it dry immediately, taking care to wipe all connection cables dry.

5 Reinstall the two (2) M6 Nuts. Use the provided 10-mm T-Handle Socket Wrench to tighten the M6 Nuts by turning them clockwise.

Tighten the M6 Nuts down evenly, each one a little bit at a time so the pressure between them remains even. Keep turning lightly until each nut makes firm contact. Then wrench tighten an additional 1/8 of a turn.

Make sure the M6 Nuts are tight and securely fastened.

If possible, use a torque wrench set to 2 lb-ft.

NOTICE: The M6 Nuts must be tightened down very securely. Failure to tighten the M6 Nuts down properly could result in a partial electrical connection, causing damage to the Control Head and voiding the Warranty.

6 Replace the Cell Post Protective Plug.

7 Replace the clear Protective Cover.

STEP 02: MOUNT CANISTER

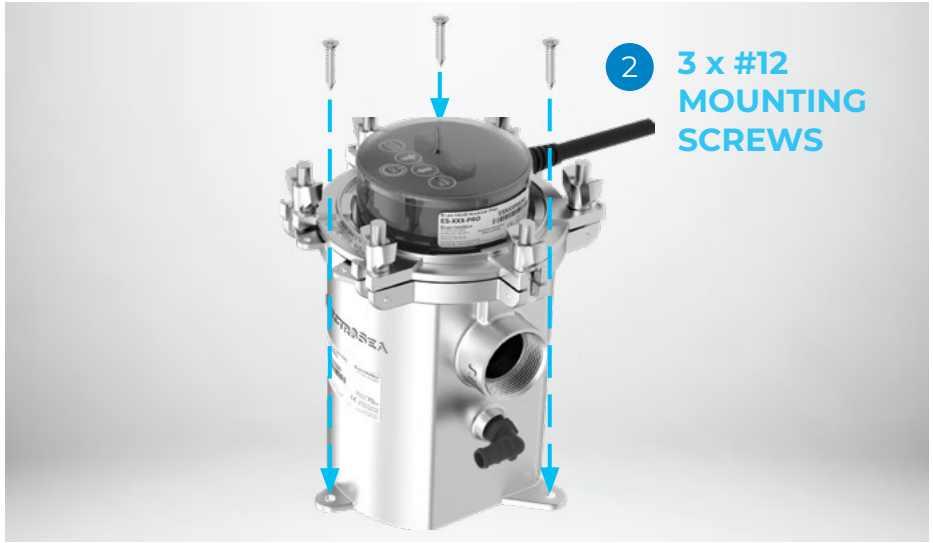

Choose a mounting location for the Canister that is near the seacock and pay attention to the direction of seawater flow through the Canister. The Canister has directional IN and OUT markings. Seawater MUST enter at the IN port and flow through and exit at the OUT port.

NOTICE: Failure to route seawater in the direction of the IN and OUT markings will result in improper operation of the ElectroStrainer® Pro.

WARNING: Mount the Canister level to prevent the accumulation of excess air.

WARNING: The Canister must be installed below the waterline.

WARNING: DO NOT insert screws where an unsafe condition could occur (i.e., through hull of boat, into holding tanks, wiring, etc.).

MOUNT LEVEL

OPTION A: BASE-TAB MOUNTING

1. To mount the Canister using the Base Tabs, first place the ElectroStrainer Pro Canister on a flat surface in the path of the seawater system, below the waterline as close to the thru-hull as possible.
2. Insert three (3) #12 Mounting Screws into the Base Tabs to secure the Canister.

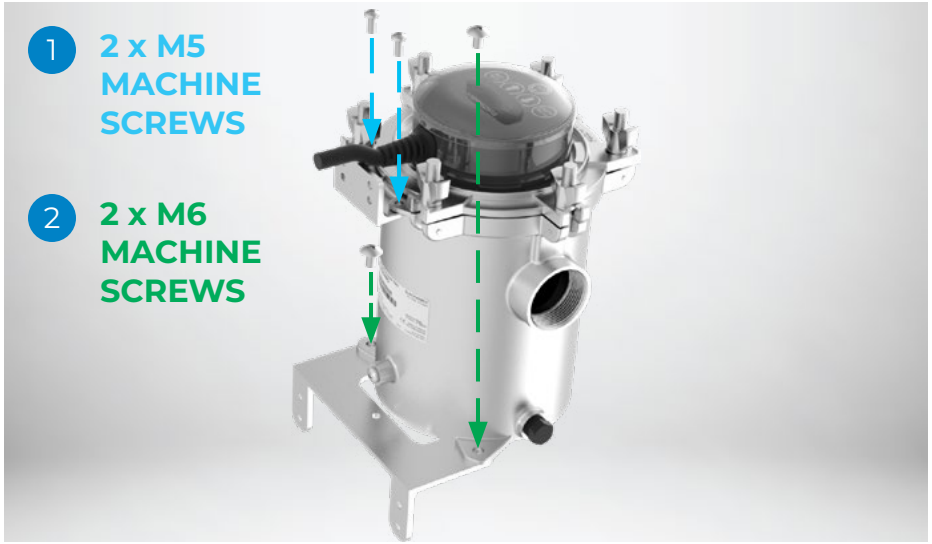

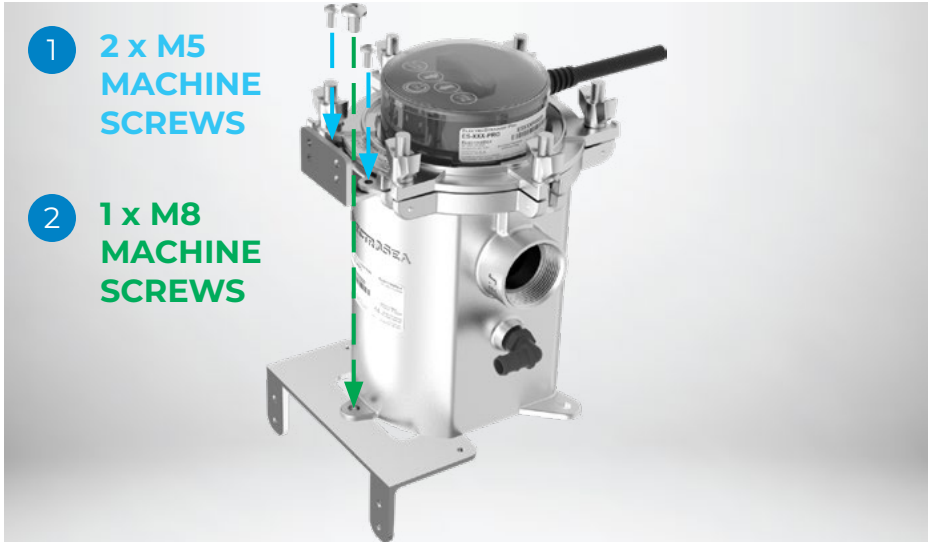

The ElectroStrainer® Pro Canister is universal and can be mounted on the front or back side using the included Mounting Brackets.

OPTION B: TWO-TAB SIDE MOUNTING

1. Attach the Top Side-Mounting Bracket as shown with two (2) M5 Machine Screws.
2. Attach the Bottom Side-Mounting Bracket as shown with two (2) M6 Machine Screws.
3. Secure the Canister to a stringer or other appropriate load-supporting vertical surface in the path of the seawater system, below the waterline as close to the thru-hull as possible with eight (8) #12 Mounting Screws.

OPTION C: ONE-TAB SIDE MOUNTING

1. Attach the Top Side-Mounting Bracket as shown with two (2) M5 Machine Screws.
2. Attach the Bottom Side-Mounting Bracket as shown with one (1) M8 Machine Screw.
3. Secure the Canister to a stringer or other appropriate load-supporting vertical surface in the path of the seawater system, below the waterline as close to the thru-hull as possible with eight (8) #12 Mounting Screws.

STEP 03: CONNECT CANISTER TO THRU-HULL

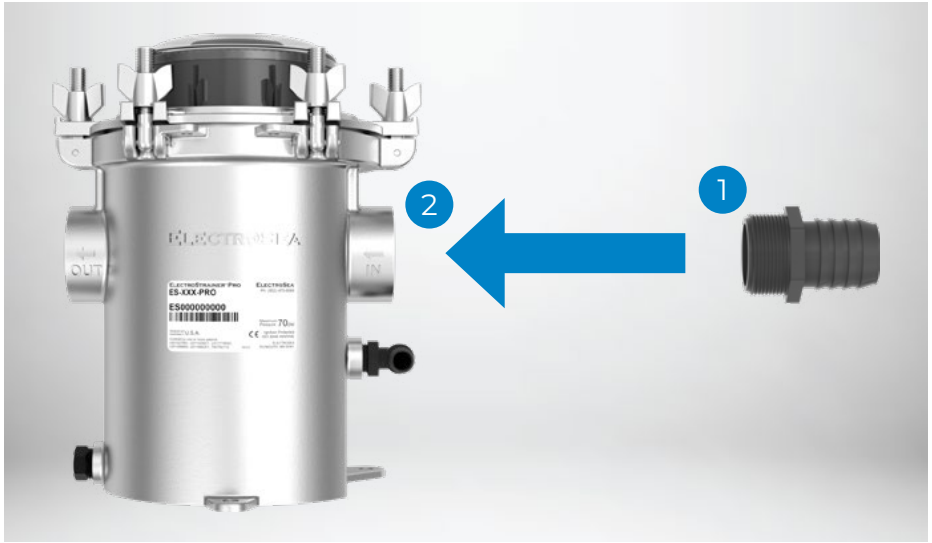

1. Prepare a Male Hose Barb Fitting by coating its threads with a thread sealant (not included) that does NOT contain PTFE, such as Blue 75™ Thread Sealant.

   WARNING: PTFE should NOT be used on plastic parts. Avoid overtightening plastic parts as they may crack and result in sinking the vessel.

2. Screw the prepared Male Hose Barb Fitting into the inlet of the ElectroStrainer® Pro Canister.

   The Canister has directional IN and OUT markings. Seawater MUST enter at the IN port and flow through and exit at the OUT port.

   NOTICE: Failure to route seawater in the direction of the IN and OUT markings will result in improper operation of the ElectroStrainer Pro.

3. Connect the Inlet of the Canister to the hose that comes out of the thru-hull fitting after the seacock.

4. Secure the connection using two (2) stainless-steel hose clamps (not included), reversing the clamps, over the flexible hose connections.

STEP 04: CONNECT CANISTER TO FLOW SENSOR

The ClearVis® Flow Sensor has flow-direction arrows, and seawater must enter and exit accordingly. The ClearVis Flow Sensor MUST BE installed on the same seawater line/pipe as the Canister and before the chlorinated return line or any cooling equipment.

WARNING: DO NOT install the ClearVis Flow Sensor on a separate or ancillary seawater line/pipe from ElectroStrainer® Pro.

1. Coat the threads of the ClearVis Flow Sensor inlet with thread sealant that does NOT contain PTFE, such as Blue 75™ Thread Sealant. The ClearVis Flow Sensor is made of glass-filled nylon for superior strength; however, this makes the threads less malleable and rougher than other plastics.

WARNING: PTFE should NOT be used on plastic parts. Avoid overtightening plastic parts as they may crack and result in sinking the vessel.

NOTICE: The ClearVis Flow Sensor can be placed on either the suction side or pressure side of the seawater pump. DO NOT place it on the inlet side of the ElectroStrainer Pro Canister or biofouling will clog the sensor.

2. Screw the ClearVis Flow Sensor into the ElectroStrainer Pro Canister Outlet. Run the recommended 12" (30.5 cm) of straight hose after the Flow Sensor (see Step 04:5).

NOTICE: The ClearVis Flow Sensor Cable connects to the Control Head Wiring Harness. The total length of these two cables when connected is 30" (76 cm).

NOTICE: If the ClearVis Flow Sensor needs to be located farther downstream from the ElectroStrainer Pro Canister, a ClearVis Flow Sensor Extension Cable (6', 1.8 m) can be ordered separately.

If there is not enough room to connect the Flow Sensor directly to the Canister Outlet, then add 12" (30.5 cm) of straight hose at the Canister Outlet before connecting the ClearVis Flow Sensor, using Hose Barb Fittings accordingly. An alternate location is on the pressure side of the pump; however, the ClearVis Flow Sensor must be located **before** the Chlorinated Return Line.

STEP 04: CONNECT CANISTER TO FLOW SENSOR

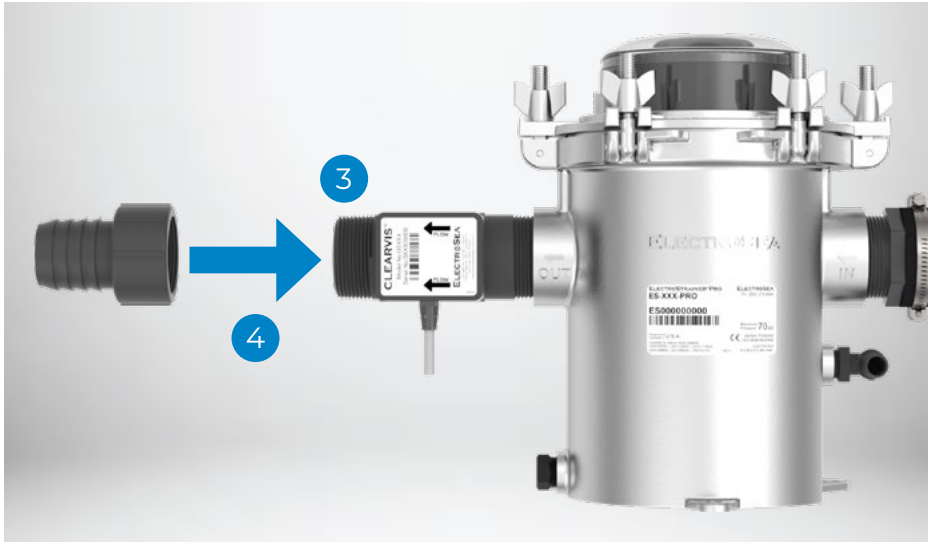

3 Coat the threads of the ClearVis® Flow Sensor outlet with thread sealant that does NOT contain PTFE, such as Blue 75™ Thread Sealant.

WARNING: PTFE should NOT be used on plastic parts. Avoid overtightening plastic parts as they may crack and result in sinking the vessel.

4 Screw a Female Hose Barb Fitting onto the output of ClearVis Flow Sensor. DO NOT overtighten the Female Hose Barb Fitting as it could crack and result in sinking the boat.

WARNING: DO NOT OVERTIGHTEN THE FEMALE HOSE BARB FITTING AS IT COULD CRACK AND RESULT IN SINKING THE BOAT.

5 Ensure there is a recommended 12" (30.5 cm) of straight hose after the ClearVis Flow Sensor. Not having a straight flow path after the Flow Sensor may alter the flow reading.

NOTICE: DO NOT place a 90° elbow or other flow-restrictive fitting on the ClearVis Flow Sensor input or output. Excessive water turbulence will interfere with its ability to obtain a measurement. The Flow Sensor will be unable to obtain a consistent reading, and ElectroStrainer® Pro will not enter Cleaning Mode.

6 Slide the outlet hose onto the female Hose Barb Fitting. Then secure the connection using two (2) stainless-steel hose clamps, reversing the clamps, over flexible hose connections.

7 Add a flexible hose hanger, hose strap, or hose-support bracket (not included) within 12" (30.5 cm) of the ClearVis Flow Sensor to ensure it is supported.

STEP 05: CONNECT CHLORINATED RETURN LINE

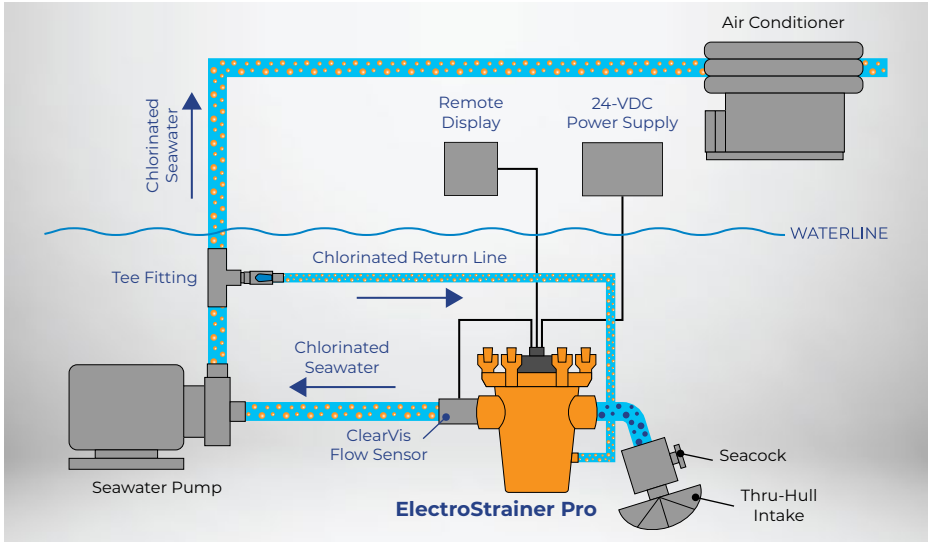

To prevent growth at the inlet of the ElectroStrainer® Pro Strainer Basket, a Chlorinated Return Line that includes a Tee-Fitting and Ball Valve should be connected from the pressure side of the pump to the Canister's Chlorinated Return Line 90-Degree Hose Barb Fitting located under the Inlet port.

Note: If there is a significant distance from the ElectroStrainer Pro to the seacock, then unchlorinated seawater could allow marine growth before the ElectroStrainer Pro. Therefore, it may be advantageous to connect the Chlorinated Return Line directly after the seacock instead of at the Canister's Chlorinated Return Line 90-Degree Hose Barb Fitting. Connecting the Chlorinated Return Line directly after the seacock ensures that seawater chlorination occurs at the closest entry point of the vessel after the seacock.

If the Chlorinated Return Line will not be connected to the ElectroStrainer Pro Canister, then use only the included composite Chlorinated Return Line Plug to replace the Chlorinated Return Line 90-Degree Hose Barb Fitting on the Canister. **DO NOT use a metal plug**. This will void the Warranty.

NOTICE: The source for the Chlorinated Return Line must be connected on the pressure side/outlet of the seawater pump and after the ClearVis® Flow Sensor. DO NOT connect it to the inlet side of the seawater pump or chlorinated seawater will not flow through the Chlorinated Return Line.

NOTICE: The Chlorinated Return Line must be added below the waterline. Failure to install the Chlorinated Return Line below the waterline could allow air to enter the seawater pump.

NOTICE: The Chlorinated Return Line decreases the overall flow rate to downstream equipment. Check downstream equipment flow requirements.

NOTICE: DO NOT add a Chlorinated Return Line if this will result in low flow to cooling equipment.

NOTICE: There will be biogrowth in the Strainer Basket if the Chlorinated Return Line is not used. ElectroSea® recommends use of the Chlorinated Return Line, which provides the greatest protection from biofouling in the strainer basket.

NOTICE: IF THE CHLORINATED RETURN LINE WILL NOT BE USED, THEN USE ONLY THE OPTIONAL COMPOSITE CHLORINATED RETURN LINE PLUG PROVIDED BY ELECTROSEA TO REPLACE THE CHLORINATED RETURN LINE 90-DEGREE HOSE BARB FITTING ON THE CANISTER. DO NOT USE A METAL PLUG. THIS WILL VOID THE WARRANTY.

STEP 05: CONNECT CHLORINATED RETURN LINE

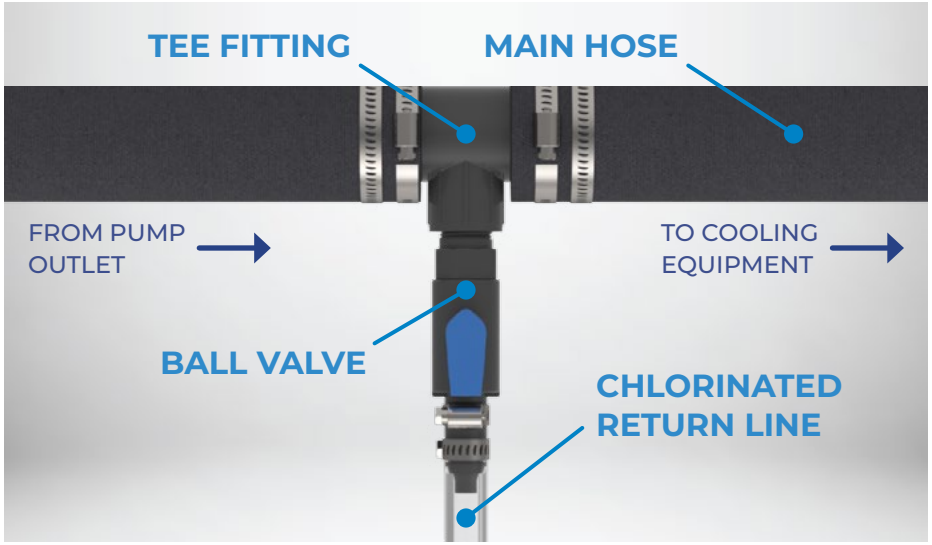

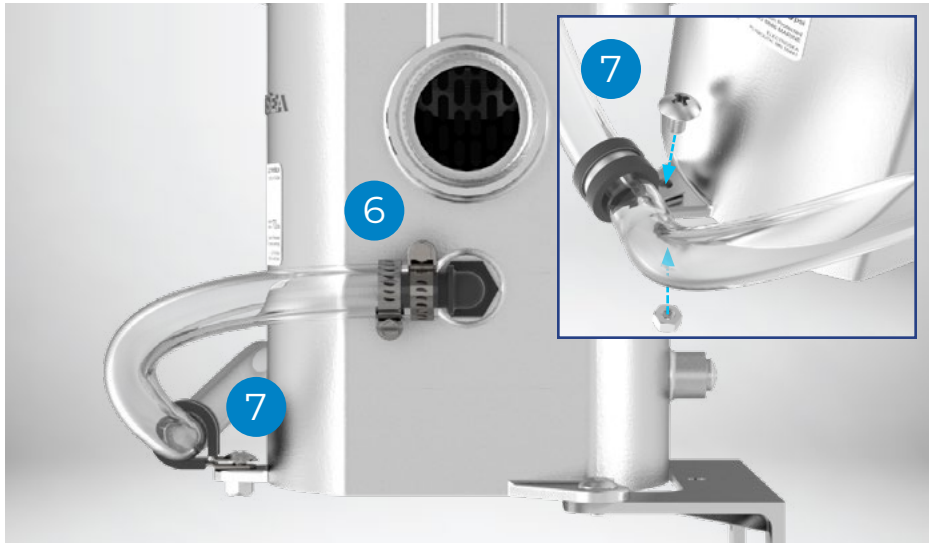

1. Select the appropriately sized Tee-Fitting to add after the ClearVis® Flow Sensor and on the pressure side/outlet of the seawater pump, below the waterline.

NOTICE: DO NOT add the Chlorinated Return Line source before the seawater pump or the ClearVis Flow Sensor.

NOTICE: The Tee-Fitting, Ball Valve, and Return Line Tubing must be below the waterline. Any air that gets into the plumbing from the drain line can cause damage to the pump and other systems.

2. The Tee-Fitting has hose barbs on the primary inlet and outlet. Connect the inlet and outlet hoses to the Tee-Fitting and secure each connection using two (2) stainless-steel hose clamps, reversing the clamps, over the flexible hose connections.

3. Coat the threads of the Ball Valve with thread sealant that does NOT contain PTFE, such as Blue 75™ Thread Sealant.

WARNING: PTFE should NOT be used on plastic parts. Avoid overtightening plastic parts as they may crack and result in sinking the vessel.

4. Screw the Ball Valve into the female end of the Tee-Fitting.

5. Connect the Chlorinated Return Line Tubing to the outlet of the Ball Valve and secure the connection using two (2) Chlorinated Return Line Hose Clamps, reversing the clamps.

6. Connect the Chlorinated Return Line Tubing from the Ball Valve to the Chlorinated Return Line 90-Degree Hose Barb Fitting under the Canister Inlet. Secure the Chlorinated Return Line Tubing using two (2) Chlorinated Return Line Hose Clamps, reversing the clamps.

7. Secure the Chlorinated Return Line Tubing with the Chlorinated Return Line Clamp. The Chlorinated Return Line Clamp can be connected to the Base Tabs or Bottom Side-Mounting Bracket using the included #12 Mounting Screw or the included M6 Machine Screw and M6 Nylon-Insert Locknut.

STEP 06: PREPARE REMOTE DISPLAY

The Remote Display can be mounted using one of two methods. It can be mounted using one of the included Mounting Brackets (see pages 22-23) or it can be flush mounted (see pages 24-25).

1. Before mounting the Remote Display, select a mounting location and a mounting method. The Remote Display can be located up to 30' (9 m) from the ElectroStrainer® Pro Control Head with the included Remote Display Communication Cable or up to 100' (30 m) from the ElectroStrainer Pro Control Head with the Extended Remote Display Communication Cable (ordered separately).

NOTICE: ElectroStrainer Pro can operate with multiple Remote Displays (ordered separately).

NOTICE: The Remote Display is water resistant and ignition protected.

NOTICE: Flush mounting requires access to the back of the panel.

2. Run the Remote Display Communication Cable from the location of the ElectroStrainer Pro Control Head to the desired Remote Display mounting location.

3. The Remote Display Communication Cable ships with a protective cap to prevent damage when running the cable. Remove the protective cap after running the cable to the desired location and before plugging it in.

NOTICE: The connector at the Remote Display end of the Remote Display Communication Cable is smaller than the connector at the ElectroStrainer Pro Control Head end. Therefore, we recommend running the Remote Display Communication Cable from the Control Head to the Remote Display mounting location.

STEP 07: MOUNT AND CONNECT REMOTE DISPLAY

OPTION A: BLACK MOUNTING BRACKET

1. To use the pre-assembled Black Mounting Bracket, proceed to Step 07:3.

OPTION B: WHITE MOUNTING BRACKET

2. To use the White Mounting Bracket, remove the pre-assembled Black Mounting Bracket and replace it with the included White Mounting Bracket.

   a) Remove the four (4) Mounting Bracket Machine Screws and remove the two (2) Mounting Bracket Locks.

   b) Lift the Remote Display out of the Black Mounting Bracket and place it in the White Mounting Bracket.

   c) Replace the Mounting Bracket Locks and use the four (4) Mounting Bracket Machine Screws to secure the Mounting Bracket Locks in place.

3. To connect the Remote Display Communication Cable to the Remote Display, remove the three (3) center screws on the back of the Remote Display and remove the back panel.

4 Insert the Remote Display Communication Cable into the IN port.

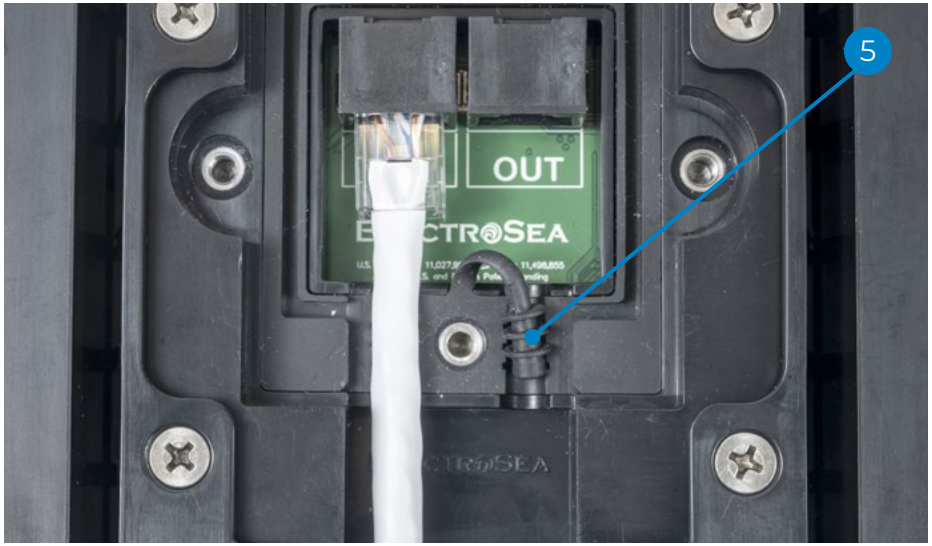

5 If you are installing an additional Remote Display (ordered separately), connect the 70' (21-m) Secondary Remote Display Communication Cable into the OUT port.

If you are not installing an additional Remote Display, locate the rubber plug and insert it into the cavity below the OUT port.

NOTICE: The included rubber plug is designed to prevent water intrusion. Failure to secure the plug in the OUT port can lead to water damage.

6 Replace the Remote Display back cover and reinsert the three (3) center screws removed in Step 07:3, being careful not to overtighten the screws.

7 Mount the Remote Display on an engine-room wall or other surface using the four (4) 316 Stainless-Steel Mounting Screws provided.

STEP 07: MOUNT AND CONNECT REMOTE DISPLAY

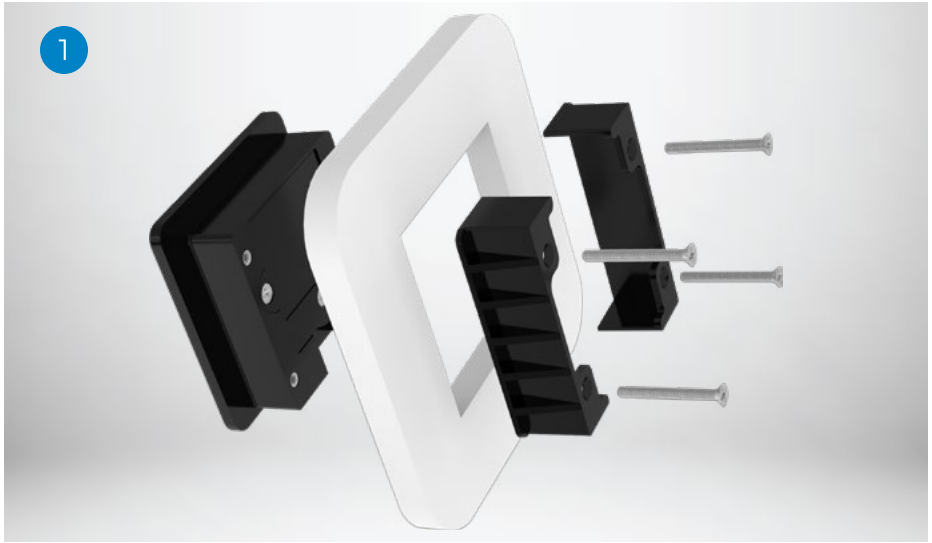

OPTION C: FLUSH MOUNTING

1 a) To flush mount the Remote Display, remove the four (4) Mounting Bracket Machine Screws and remove the two (2) Mounting Bracket Locks.

b) Lift the Remote Display out of the Black Mounting Bracket.

c) Use the provided template to cut a square hole measuring approximately 3.23" x 3.23" (82 x 82 mm) using a 7/32" drill bit for the corners in the panel or dash where you are mounting the Remote Display.

NOTICE: We DO NOT recommend cutting acrylic paneling. Instead, we recommend having a custom panel designed and fabricated to fit the Remote Display.

d) Place the Remote Display in the hole from the front side.

e) Replace the Mounting Bracket Locks and use the four (4) #8-32 x 1½" Mounting Screws to secure the Remote Display to the panel.

3 To connect the Remote Display Communication Cable to the Remote Display, remove the three (3) center screws on the back of the Remote Display and remove the back panel.

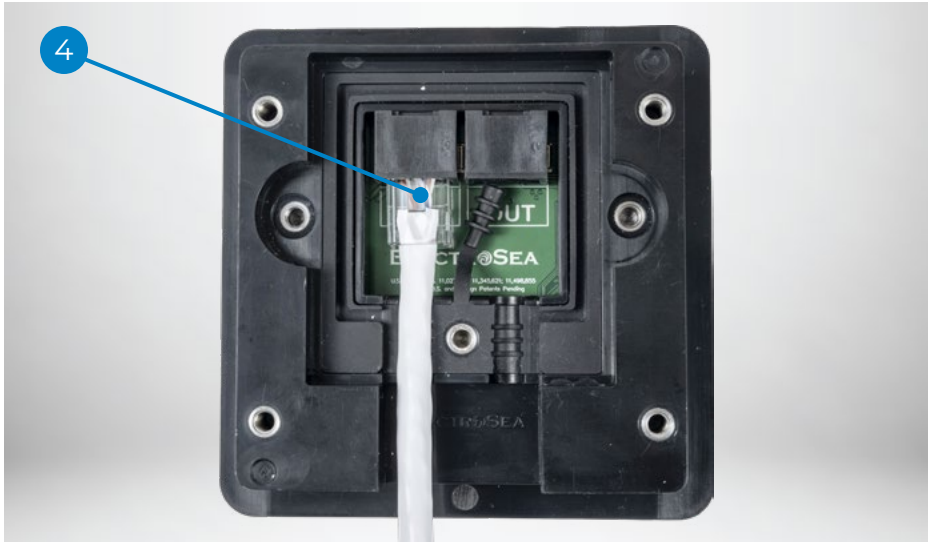

4 Insert the Remote Display Communication Cable into the IN port.

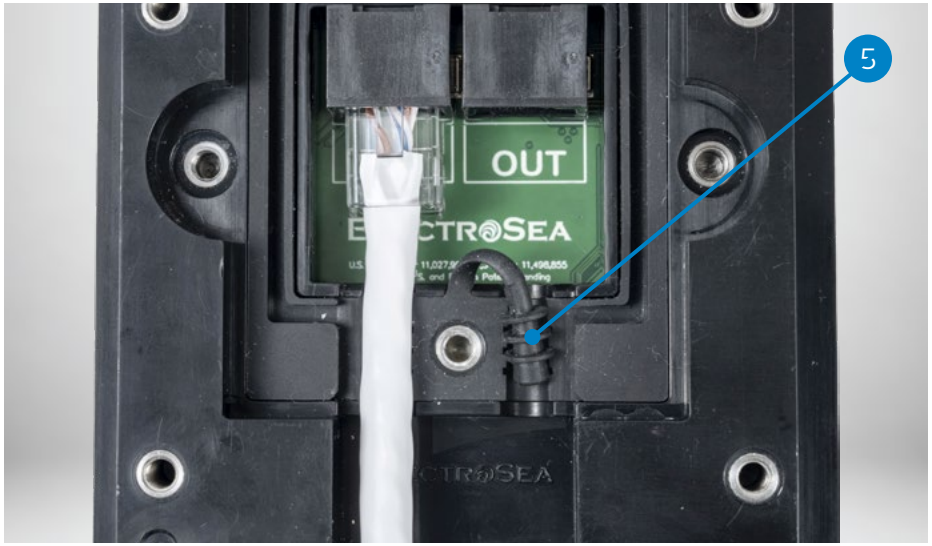

5 If you are installing an additional Remote Display (ordered separately), connect the 70' (21-m) Secondary Remote Display Communication Cable into the OUT port.

If you are not installing an additional Remote Display, locate the rubber plug and insert it into the cavity below the OUT port.

NOTICE: The included rubber plug is designed to prevent water intrusion. Failure to secure the plug in the OUT port can lead to water damage.

6 Replace the Remote Display back cover and reinsert the three (3) center screws removed in Step 07:3, being careful not to overtighten the screws.

STEP 08: MAKE ELECTRICAL CONNECTIONS

BOND CANISTER

The ElectroStrainer® Pro Canister must be connected to the vessel's bonding circuit.

1. Run a wire (not included) from the vessel's bonding circuit to the Bonding Terminal on the ElectroStrainer Pro Canister.
2. Secure the bonding wire to the Canister using a 1/4" crimped ring terminal (not included).

   All wiring must be performed according to the appropriate electrical standards (i.e., ABYC).

NOTICE: Failure to bond ElectroStrainer Pro will void the Warranty.

CONNECT THE CONTROL HEAD WIRING HARNESS

The Control Head Wiring Harness includes connections for the (A) ClearVis® Flow Sensor, the (B) Remote Display, the (C) Power Source, and a (D) USB Port for firmware updates.

STEP 08: MAKE ELECTRICAL CONNECTIONS

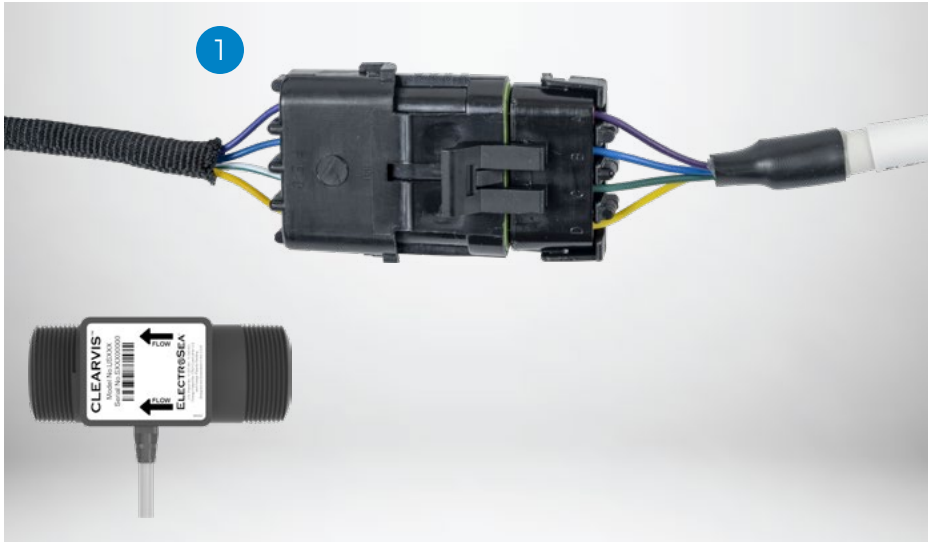

1. Connect the cable from the ClearVis® Flow Sensor to the ClearVis Flow Sensor Connection on the Control Head Wiring Harness.

   If using the optional ClearVis Flow Sensor Extension Cable (ordered separately), connect it between the ClearVis Flow Sensor and the ClearVis Flow Sensor Connection on the Control Head Wiring Harness.

2. Remove the plug from the Control Head Wiring Harness and connect the Remote Display Communication Cable or the Extended Remote Display Communication Cable (ordered separately) from the Remote Display to the Remote Display Connection on the Control Head Wiring Harness.

STEP 08: MAKE ELECTRICAL CONNECTIONS

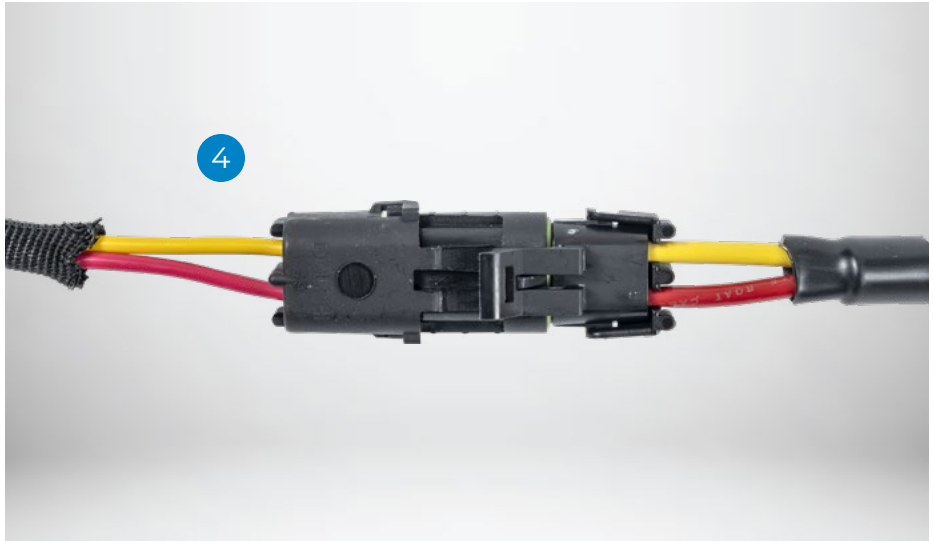

3 Locate an always-on 24-VDC power supply. This power-supply source should include a 7-Ampere circuit breaker (or next available higher amperage circuit breaker, max 10 A).[1] All wiring must be performed according to the appropriate electrical standards (i.e., ABYC).

Connect the bare wire ends of the Power Cable to this 24-VDC power source.

WARNING: DO NOT connect the ElectroStrainer® Pro directly to a battery bank or other power source that is subject to high-voltage transients.

NOTICE: If the 24-VDC power-supply distance exceeds the length of the 30’ (9-m) ElectroStrainer Pro Power Cable, then the cable can be spliced to a longer cable. Larger gauge wire may be required according to the appropriate electrical standards (i.e., ABYC). Consult a professional electrician.

4 Connect the Power Cable to the Power Connection on the Control Head Wiring Harness.

WARNING: The Control Head MUST BE properly secured to the Canister before connecting the Power Cable. DO NOT APPLY POWER to the Control Head if it is not physically secured to the ElectroStrainer Pro Canister.

[1]Recommended circuit breaker per ABYC standards. Circuit breaker size and/or location may be different depending on local requirements. Follow all local standards where required.

STEP 09: SECURE ELECTRICAL CONNECTIONS

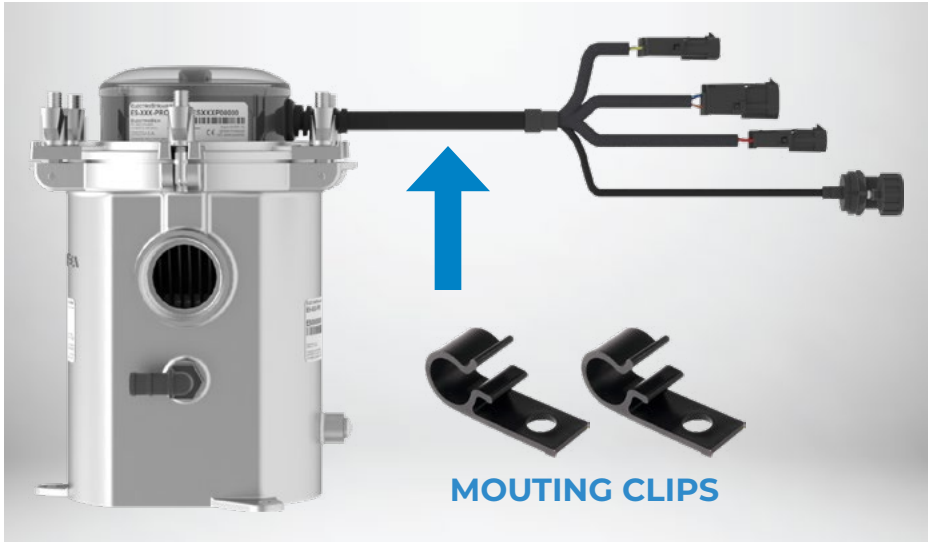

The Control Head Wiring Harness must be left loose enough so that the Control-Cell Assembly can be lifted 10” (25 cm) straight up out of the ElectroStrainer® Pro Canister for routine maintenance and cleaning.

1. Use the included Mounting Clips on the 18” (45-cm) Control Head Wiring Harness and ensure that it can be easily released from the Mounting Clips during routine maintenance and cleaning.

NOTICE: DO NOT use permanent cable connectors or zip ties on the 18” (45-cm) Control Head Wiring Harness as you will be unable to lift the Control-Cell Assembly out of the ElectroStrainer Pro Canister for routine maintenance and cleaning.

NOTICE: DO NOT put excessive force on the Control Head Wiring Harness.

STEP 10: FINISH INSTALLATION

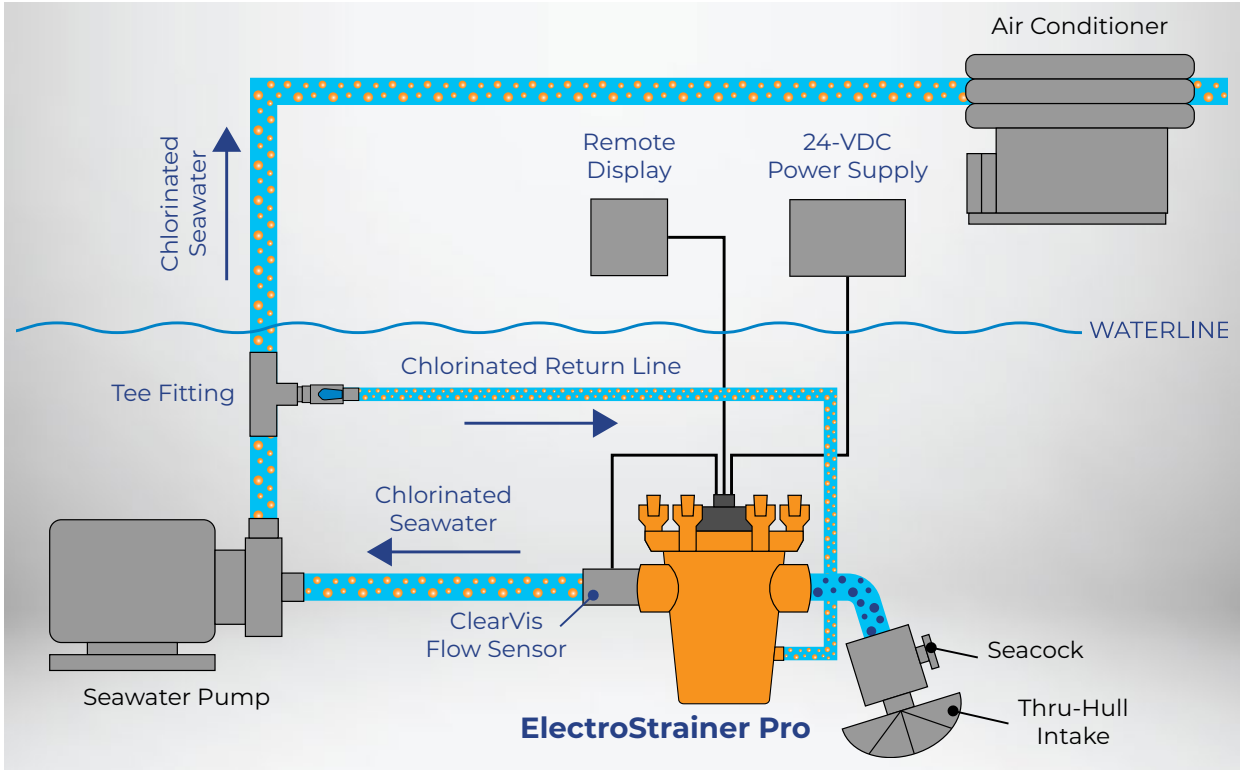

1. Double-check that all fittings, hose clamps, and Wing Nuts are secure. Open the seacock valves and verify there are no leaks.
2. Turn the seawater intake pump on. The seawater intake pump must be on and pumping seawater at normal flow rates for the ElectroStrainer® Pro to operate.
3. The ElectroStrainer Pro should turn on automatically after the power connection is made. If necessary, remove the clear Protective Cover and press and hold the Power/OK button to power ON the ElectroStrainer Pro. The start-up process takes approximately 30 seconds, during which time the flow rate will flash. Once the start-up process is complete, the CLEANING indicator will illuminate and the flow rate will stop flashing. The CLEANING indicator should remain illuminated to indicate the unit is powered ON and functioning properly.
4. Replace the clear Protective Cover if it was removed.

NOTICE: Any air trapped in the Canister must be bled out. Cycle the seawater pump and/or loosen the Wing Nuts to bleed out excess air, then re-tighten the pressure ring on the ElectroStrainer Pro Canister.

NOTICE: Double-check that the ElectroStrainer Pro Canister, Chlorinated Return Line, and seawater pump stay completely full of water after the pump has shut off and that any discharge has drained from the boat. Any air that gets into the plumbing from the drain line can cause damage to the pump and other systems.

NOTICE: Water must fill the ElectroStrainer Pro Canister, Chlorinated Return Line, and seawater pump completely via gravity when the seacock is open. Check to make sure air is not pulled into the system in normal operating conditions.

NOTICE: DO NOT restrict seawater flow to the ElectroStrainer Pro Canister.

	ES-200-PRO	ES-150-PRO
ElectroStrainer® Pro Canister and Control Head Dimensions (L x W x H)	9.48 x 8.88 x 10.34 inches (240.79 x 225.552 x 262.64 mm)	8.29 x 7.74 x 10.28 inches (210.57 x 196.60 x 261.112 mm)
ElectroStrainer Pro Canister and Control Head Weight	25 lb 2 oz (11.40 kg)	21 lb 5 oz (9.67 kg)
Remote Display Dimensions Including Mounting Bracket (L x W x H)	5.5 X 3.96 X 1.51 inches (139.70 x 100.58 x 38.35 mm)	5.5 X 3.96 X 1.51 inches (139.70 x 100.58 x 38.35 mm)
Power Source	24 VDC	24 VDC
Power Consumption	Max Power: 110 watts Typical Power: 70 watts	Max Power: 110 watts Typical Power: 50 watts
Cables Included	Power Cable: 30 ft (9 m) Remote Display Communication Cable: 30 ft (9 m)	Power Cable: 30 ft (9 m) Remote Display Communication Cable: 30 ft (9 m)
Optional Cables (ordered separately)	Extended Remote Display Communication Cable: 100 ft (30 m) ClearVis® Flow Sensor Extension Cable: 6 ft (1.8 m)	Extended Remote Display Communication Cable: 100 ft (30 m) ClearVis Flow Sensor Extension Cable: 6 ft (1.8 m)
Inlet / Outlet	2.0 inches NPT	1.5 inches NPT
Flow Rate	Optimal Flow: 20-40 gpm (75-151 lpm) Min/Max Flow: 10-75 gpm (38-284 lpm)	Optimal Flow: 12-30 gpm (45-114 lpm) Min/Max Flow: 8-50 gpm (30-189 lpm)
Maximum Operating Pressure	70 psi	70 psi
Replacement Cell Part Number	300074-042	300074-041

USER INTERFACE

CONTROL HEAD DISPLAY AND KEYPAD

REMOTE DISPLAY

CONTROL HEAD KEYPAD FUNCTIONS

POWER/OK: Use Power/OK to turn the ElectroStrainer® Pro ON and OFF and to make selections. See page 33 for further instructions.

FLOW ALERT: Use FLOW ALERT to set a value in gpm or lpm as your minimum seawater flow rate threshold for the strainer. See page 34 for further instructions.

UP/DOWN ARROWS: Use UP/DOWN with the Flow Alert and gpm/lpm features.

GPM/LPM: Use GPM/LPM to select either imperial (gpm) or metric (lpm) units. See page 35 for further instructions.

OPERATING MODES

- **CLEANING:** ElectroStrainer Pro is ON and electrochemically generating chlorine to prevent biofouling. This is the normal operating mode for the ElectroStrainer Pro. In this mode, the CLEANING indicator will flash, and the seawater flow rate at the output of the ElectroStrainer Pro will be displayed in gpm or lpm.

  When the seawater pump turns on and water starts flowing through the ElectroStrainer Pro, it will take approximately 30 seconds to measure the flow rate and for the system to enter Cleaning Mode. This is normal and part of the start-up process.

- **STRAINER:** ElectroStrainer Pro is ON and in Cleaning Mode, but the flow rate measured is less than or equal to the value set in the Smart Strainer Flow Alert® feature. The Strainer Flow Alert indicates the Strainer Basket has debris and/or the flow rate is at or below the set minimum seawater flow rate threshold value.

- **CELL:** ElectroStrainer Pro is sensing low salinity (brackish or fresh water), high resistance, or a Cell issue. This indicator may also mean the Cell is at the end of its useful life. See page 36 for details.

REMOTE DISPLAY

The Remote Display provides flow rate and operating status. It is display only and does not control any operating functions.

NORMAL OPERATION

During normal operation, the ElectroStrainer® Pro will enter Cleaning Mode when seawater flow is detected. When the system is in Cleaning Mode, ElectroStrainer Pro is automatically generating a precise, low level of chlorine. The CLEANING indicator will flash, and the flow rate will appear in gpm or lpm.

1. The ElectroStrainer Pro should turn on automatically after the power connection is made. If necessary, remove the clear Protective Cover and press and hold the Power/OK button to power ON the ElectroStrainer Pro. Replace the clear Protective Cover if it was removed.
2. The start-up process takes approximately 30 seconds, during which time the flow rate will flash.
3. Once the start-up process is complete, the CLEANING indicator will flash, and the flow rate will stop flashing. The CLEANING indicator will continue to flash to indicate the system is in Cleaning Mode and operating normally.

If the ElectroStrainer Pro is powered ON and no seawater is flowing through the system, then the system will be in the OFF state and “0” will show. This is a normal operating mode, provided there is no seawater flow. ElectroStrainer Pro will automatically resume Cleaning Mode once seawater flow is detected.

OPTIMUM FLOW RATE

ElectroStrainer Pro does not control flow rate. Seawater flow rate is controlled by the seawater pump. The seawater pump was specified and installed by the boat manufacturer based on many factors, including elevation, plumbing, length of run, and cooling-equipment requirements. Flow rates will vary from boat to boat.

The ClearVis® Flow Sensor measures the amount of seawater moving through the sensor in real time.

To determine your baseline or optimum flow rate, we recommend looking at your flow rates when you know the Strainer Basket and all lines are clean and free of marine growth and all equipment is functioning normally. A good time to do this is immediately following installation of the ElectroStrainer Pro.

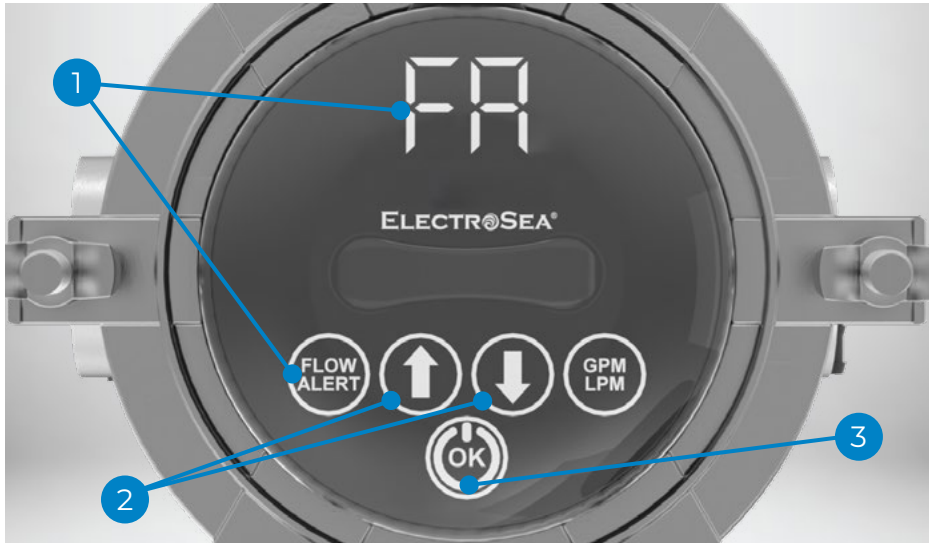

SMART STRAINER FLOW ALERT®

The Smart Strainer Flow Alert feature monitors seawater flow. This smart feature notifies the user if the ElectroStrainer® Pro Strainer Basket contains debris, such as seaweed or mud; part of the seawater circuit, such as the intake screen or thru-hull fitting, is partially blocked; or the seawater pump is producing low flow and requires maintenance. The Smart Strainer Flow Alert feature allows the user to set a minimum seawater flow rate threshold value. If the seawater flow rate drops below the minimum value for a period of time, STRAINER will flash on the display (no audible alert).

NOTICE: The Smart Strainer Flow Alert feature must be set up by the installer or end user. It is set to "0" (OFF) when ElectroStrainer Pro is new and has never been used.

NOTE: To determine the value for a Smart Strainer Flow Alert, we recommend first determining your baseline or optimum flow rate when the seawater system is clean and descaled. Then choose a Flow Alert value that is below that amount (e.g., 80% of the baseline amount).

1. To set the Smart Strainer Flow Alert, press and hold FLOW ALERT until "FA" flashes in the display, then release it. If the Smart Strainer Flow Alert has not been previously set, then "0" will show on the display.
2. Press the UP or DOWN arrow until the desired minimum seawater flow rate threshold value appears.
3. Press OK to save the selected value.

NOTICE: ElectroStrainer Pro will continue generating chlorine even after a Smart Strainer Flow Alert occurs. If a Smart Strainer Flow Alert occurs

(1) Check intake screens for blockage or debris.

(2) Check seawater pump output, impeller, or other causes of low flow.

(3) Check ElectroStrainer Pro Strainer Basket for debris, seaweed, or mud.

FLOW RATE UNITS

ElectroStrainer® Pro can be set to monitor flow rate in gallons per minute (gpm) or liters per minute (lpm) at the output of the system.

1. To change the units your flow rate is displayed in, press and hold GPM/LPM for 2 seconds. The current flow rate indicator will flash quickly.
2. Press the UP or DOWN arrow to toggle between gallons per minute (“G-”) and liters per minute (“L-”) until the desired unit of measurement appears.
3. Press OK to save the selected value.

FIRMWARE UPDATES

1. To perform a firmware update, unscrew the cover on the USB Port on the Control Head Wiring Harness.
2. Insert the USB drive with the firmware update provided by ElectroSea® into the USB Port.
3. The update process will automatically begin. The display will flash in a pattern before counting down from 99 to 0. **THIS PROCESS MAY TAKE 3-5 MINUTES. DO NOT UNPLUG THE USB DRIVE OR POWER OFF THE ELECTROSTRAINER PRO DURING THE UPDATE.**
4. After the countdown reaches 0, all lights on the display will flash and the system will automatically power cycle. The firmware update is complete, and ElectroStrainer Pro will resume normal operation.
5. Remove the USB drive and replace the USB Port cover.

NOTICE: Failure to properly cover the USB port could allow corrosion of the connector and prevent the ability to make future firmware updates.

CELL INDICATOR

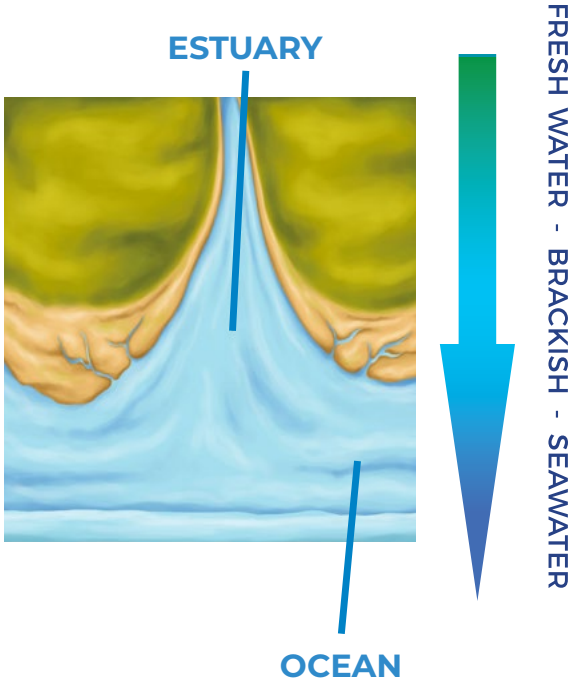

The ElectroStrainer® Pro CELL indicator will illuminate or flash in various conditions. A CELL indicator is not an immediate cause for concern and may be temporary depending on seawater salinity level. ElectroStrainer Pro will continuously attempt to generate chlorine and automatically resume standard operation when conditions are resolved.

If the CELL indicator flashes and the display cycles between "LO," "SA," and the flow rate, then check for the following conditions:

- Water salinity is below 20 parts per thousand. This is the most frequent cause of the CELL indicator. Vessels often encounter brackish or fresh water when cruising inland or from extended storms and freshwater runoff. ElectroStrainer Pro will not generate chlorine, and the CLEANING indicator will not illuminate while the vessel is operating in fresh water. **RESOLUTION: Return vessel to seawater with adequate salinity.**

NOTICE: Fresh water is not harmful to the ElectroStrainer Pro or the Cell. The system will not generate chlorine until the vessel is returned to seawater with adequate salinity. If your vessel will be spending an extended period of time in fresh water, we recommend replacing the Cell and Control Head with a Maintenance Lid (ordered separately) until the vessel is returned to seawater with adequate salinity.

- The ElectroStrainer Pro Control Head is not properly connected to the Cell. **RESOLUTION: Refer to the instructions on pages 11-13 to ensure the two (2) M6 Nuts are tightened securely and evenly.**

- The connection point between the ElectroStrainer Pro Control Head and Cell Posts has debris or corrosion. **RESOLUTION: Follow the instructions on pages 11-13 to remove the Control Head, check the Cell Posts for debris or signs of corrosion, and replace the Control Head, ensuring the M6 Nuts are tight and securely fastened.**

- The ElectroStrainer Pro Cell has excessive mud or other debris. **RESOLUTION: Follow the instructions on pages 38-44 to rinse the ElectroStrainer Pro Cell Screen or Cell with fresh water.**

If the CELL indicator illuminates and the display cycles between "E3" and the flow rate, then check for the conditions listed above. If the error persists:

- The ElectroStrainer Pro Cell is at the end of its useful life. When the Cell has reached the end of its useful life, it can no longer generate chlorine. The Cell life is dependent on flow rate, hours of use, seawater quality, and other factors. **RESOLUTION: See the table on page 3 for your replacement Cell part number and contact your ElectroSea® Dealer or visit www.electrosea.com.**

OPTIMAL PERFORMANCE

The ElectroStrainer® Pro should be powered ON and have seawater flowing through it whenever possible. This provides the vessel's seawater circuit with constant chlorinated seawater to prevent unwanted marine growth. Intermittent or stagnant seawater that is not continuously electrochemically treated allows growth of marine microorganisms. Barnacles have the innate ability to close themselves off and survive intermittent exposure to biocidal agents.

- DO NOT turn off seawater pumps, air conditioners, or chillers for an extended period of time.

Inspect the vessel for problem areas:

- Pre-existing biofouling in seawater lines prior to ElectroStrainer Pro installation
- Clogged seawater intakes
- Impacted, blocked, or occluded lines from debris lodged in plumbing
- Sporadic demand valve areas (Depending on the system, valves that turn on and off can foster unwanted marine growth.)

SEAWATER PUMPS

The ElectroStrainer Pro does not control the seawater pumps. Instead, the ElectroStrainer Pro passively monitors seawater flow using the ClearVis Flow Sensor. When seawater flow is detected, the ElectroStrainer Pro will enter Cleaning Mode and begin to generate a precise, low level of chlorine.

CLEARVIS® FLOW SENSOR

The ClearVis Flow Sensor does not require calibration. If you are experiencing variable flow readings or no flow ("0") when your seawater pump is operating, then refer to page 46 for troubleshooting information.

MAINTENANCE LID

The ElectroStrainer Pro Cell Plates contain a special metal-oxide coating that will be permanently damaged if they are exposed to chemicals, such as those used during winterization or acid descaling. A Maintenance Lid (ordered separately) may be used to temporarily replace the Cell and Control Head as needed. A Maintenance Lid may also be used if the vessel is moved to fresh water for an extended period.

NOTICE: If the ElectroStrainer Pro has been OFF and not generating chlorine for an extended period of time, it is possible that the seawater pipes have marine growth inside of them. The chemicals used to perform an acid descaling will damage the Cell and void the Warranty. To perform an acid descaling after ElectroStrainer Pro installation, use a Maintenance Lid (ordered separately) to temporarily replace the Cell and ElectroStrainer Pro Control Head during the descaling process.

Contact your ElectroSea® Dealer or visit www.electrosea.com for additional information.

STRAINER MAINTENANCE

1. Lift the clear Protective Cover straight up to remove. Set aside.
2. Press and hold the Power/OK button to power OFF the ElectroStrainer® Pro.
3. Replace the clear Protective Cover to protect from any water overspray during cleaning.
4. Turn off the circuit breaker to the ElectroStrainer Pro. It is NOT necessary to disconnect the Power Connection, ClearVis® Flow Sensor Connection, Remote Display Connection, or USB Port.

WARNING: DO NOT POWER ON THE SYSTEM WHEN THE CONTROL HEAD IS NOT CONNECTED TO THE CELL.

NOTICE: It is NOT necessary to disconnect any cables before performing maintenance. The Power Connection, ClearVis Flow Sensor Connection, Remote Display Connection, and USB Port DO NOT need to be disconnected to perform strainer maintenance.

5. Shut off the seawater intake pump, the pump circuit breaker, and all seacock shut-off valves.

WARNING: Shut off the seawater intake pump, the pump circuit breaker, and all seacock shut-off valves. Turn off ALL seacock shut-off valves in the seawater circuit at or below the waterline. This includes any output seacocks to prevent back siphoning. Failure to shut off the seawater circuit could result in sinking the vessel.

6. Loosen the Pressure Ring by turning the Wing Nuts counterclockwise.

7 Lift up on the side or front edge of the Pressure Ring by hand and slide it back over the Control Head Wiring Harness.

NOTICE: It is NOT necessary to disconnect any cables before performing maintenance. The Power Connection, ClearVis® Flow Sensor Connection, Remote Display Connection, and USB Port DO NOT need to be disconnected to perform strainer maintenance.

8 Remove the Control-Cell Assembly by lifting it straight up with your fingers. Set the Control-Cell Assembly aside in a safe, dry location.

NOTICE: If it is difficult to lift the Control-Cell Assembly, then safely release system pressure to reduce suction before lifting the Control-Cell Assembly.

NOTICE: The Control Head is water resistant. It is NOT waterproof and should never be submerged in water. If it gets wet, then wipe it dry immediately, taking care to wipe all connection cables dry.

9 Remove the plastic Cell Screen from the Cell. To separate these components, hold the Control Head in one hand and the plastic Cell Screen in the other, then pull lightly in opposite directions. The Cell Screen will slide apart from the Cell.

DO NOT push in the side tab locks, or this will make the plastic Cell Screen hard to remove.

10 Spray the Cell Screen with fresh water to remove debris.

NOTICE: Contact with cleaning chemicals will damage the ElectroStrainer® Pro Cell and Canister and void the Warranty.

NOTICE: DO NOT touch the Cell Plates or use any type of mechanical brush or high-pressure spray on the Cell.

NOTICE: The Cell Plates contain a special metal-oxide coating that will be permanently damaged if you handle them.

11 ONLY if there is mud or debris on the Cell Plates, should you clean the Cell by rinsing it with fresh water. If it is necessary to rinse the Cell, disconnect all cables from the Control Head Wiring Harness before doing so. **DO NOT use any type of chemical, brush, or high-pressure spray on the Cell.**

After rinsing the Cell with fresh water, make sure the Control Head Wiring Harness Connections are DRY and DO NOT have any water or moisture on them. Reconnect the Control Head Wiring Harness Connections after rinsing the Cell with fresh water.

NOTICE: The Control Head is water resistant. It is NOT waterproof and should never be submerged in water. If it gets wet, then wipe it dry immediately, taking care to wipe all connection cables dry. Do NOT use a pressure washer or high-pressure spray.

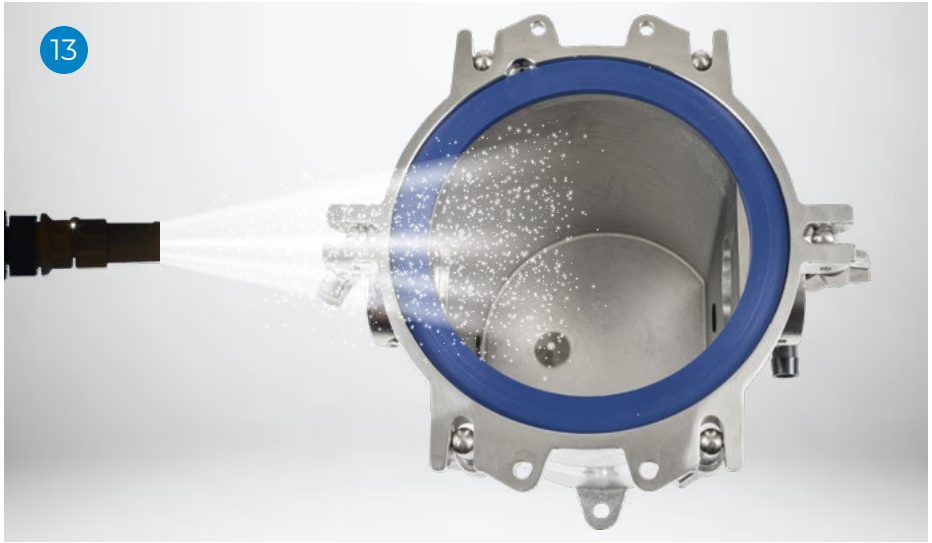

12 Remove the Strainer Basket from the Canister. Spray the Strainer Basket with fresh water to remove any mud, seaweed, or debris caught in the strainer pores.

13 Spray the internal surfaces of the Canister with fresh water.

NOTICE: THERE MAY BE NEGLIGIBLE GROWTH AT THE INLET OF THE STRAINER BASKET OR INTERIOR OF THE CANISTER. THIS IS NORMAL AS INCOMING SEAWATER IS NOT YET CHLORINATED AND/OR THERE MAY BE AREAS OF LOW CHLORINATION AT CERTAIN FLOW RATES. THIS IS NOT CAUSE FOR CONCERN. ELECTROSTRAINER® PRO IS WORKING PROPERLY IF THE CLEANING INDICATOR IS FLASHING.

NOTICE: DO NOT perform acid descaling of the seawater circuit after the ElectroStrainer Pro has been installed. Descaling acids or cleaning chemicals will damage the Cell and void the Warranty. See page 37 for more information.

NOTICE: Low seawater flow may damage the cooling system and other components that depend on this water for proper operation. It is the owner's responsibility to monitor the vessel's seawater flow rate and perform any maintenance on the vessel's seawater pumps and strainers.

14 Once the Strainer Basket and Canister are clean, place the Strainer Basket back into the Canister, aligning the straight edge of the Strainer Basket with the straight edge of the Canister.

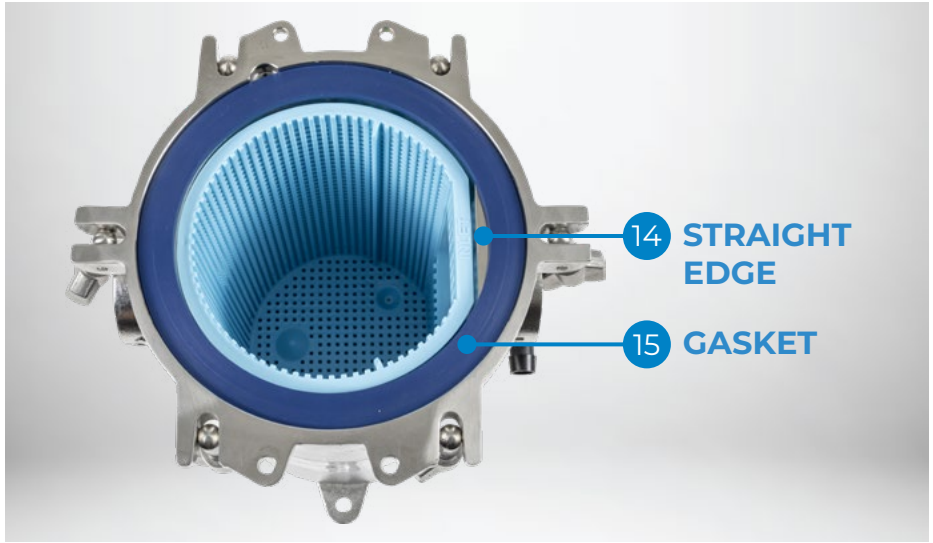

15 Confirm the blue Gasket is in the top of the Canister.

16 The Canister and lid are keyed and can be inserted in only one direction. Align the straight edge of the Cell Screen and Strainer Basket. Make sure the lid key is aligned with the Canister, then insert the Control-Cell Assembly into the Canister.

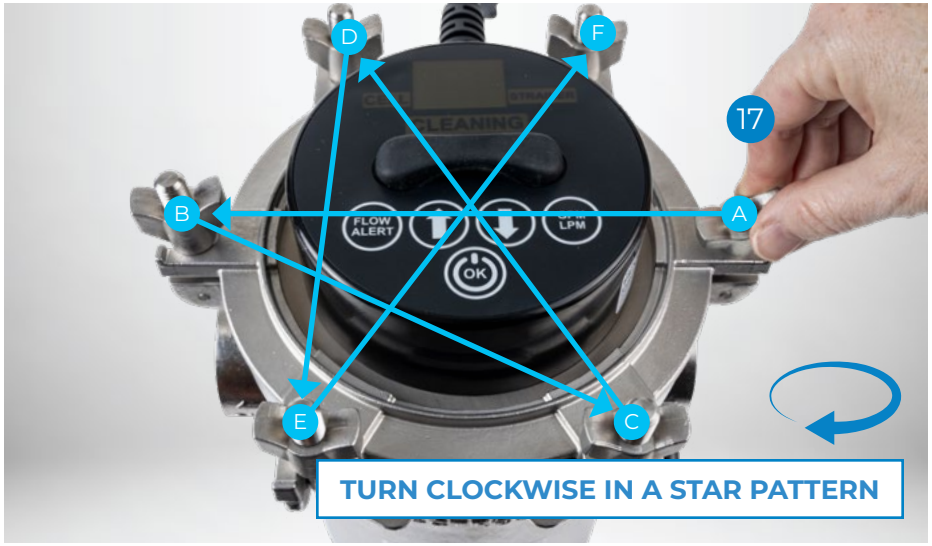

17 Add the Pressure Ring to the top of the ElectroStrainer® Pro Canister. Tighten down the Wing Nuts evenly, working in a star pattern. DO NOT use tools to perform this tightening process.

18 Double-check that all fittings, hose clamps, and wing nuts are secure. Open the seacock valves and verify there are no leaks.

If necessary, bleed excess air from the Canister, then retighten the Wing Nuts evenly.

19 Turn the circuit breaker to the ElectroStrainer Pro back on.

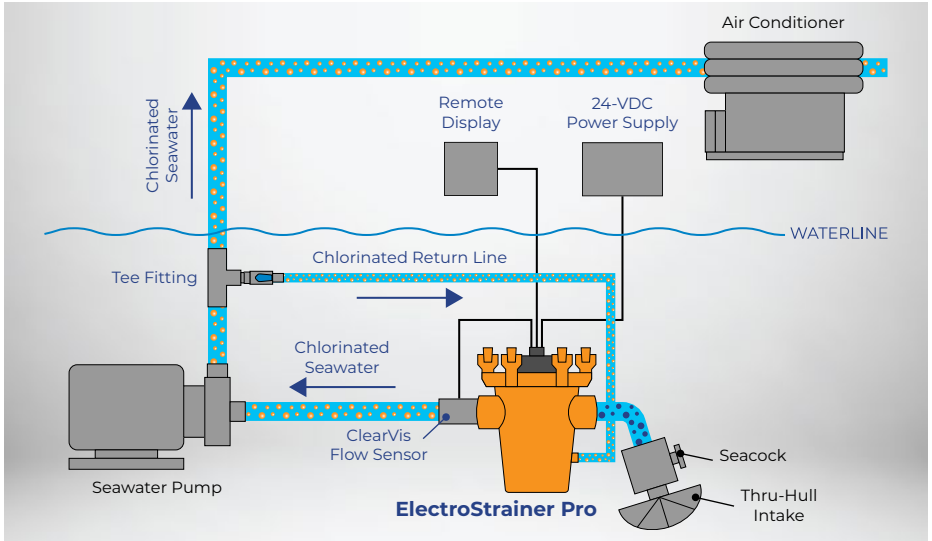

20 Turn the seawater intake pump circuit breaker and pump on. The seawater intake pump must be on and pumping seawater at normal flow rates for the ElectroStrainer® Pro to operate.

NOTICE: Any air trapped in the Canister must be bled out. Cycle the seawater pump and/or loosen the Wing Nuts to bleed out excess air, then re-tighten the Pressure Ring on the ElectroStrainer Pro Canister.

NOTICE: DO NOT restrict seawater flow to the ElectroStrainer Pro Canister.

21 The ElectroStrainer Pro should turn on automatically after the power connection is made. If necessary, remove the clear Protective Cover and press and hold the Power/OK button to power ON the ElectroStrainer Pro. The start-up process takes approximately 30 seconds, during which time the flow rate will flash. Once the start-up process is complete, the CLEANING indicator will illuminate and the flow rate will stop flashing. The CLEANING indicator should remain illuminated to indicate the unit is powered ON and functioning properly.

22 Replace the clear Protective Cover if it was removed.

PERIODIC INSPECTION

The ElectroStrainer Pro should be observed during regular inspection of the vessel's engine room. During normal operation, the CLEANING indicator will flash. This indicates the ElectroStrainer Pro is generating a safe and effective low level of chlorine to prevent unwanted marine growth, barnacles, and biofilm in the strainer and seawater lines.

If there are any concerns during the regular inspection noted above, perform a more thorough process:

- Visually inspect all wires and connections to the Control Head Wiring Harness.
- Disassemble the Canister and thoroughly flush the Strainer Basket, Cell Screen, and Cell, if necessary, with fresh water. (See pages 38-44.)
- Visually inspect the ClearVis® Flow Sensor.
- Visually inspect the seawater conduits downstream of the ElectroStrainer Pro to confirm marine-growth prevention.

NOTICE: Inspection and maintenance are the responsibility of the vessel owner.

See page 46 for troubleshooting information and page 47 for a list of ElectroStrainer Pro error codes.

MODE	DESCRIPTION	ACTION
Cleaning	ElectroStrainer® Pro is in the Cleaning Mode and is preventing biofouling by chlorinating seawater. The CLEANING indicator will flash, and the flow rate will appear in gpm or lpm.	This is a normal operating mode. See page 33 for details.
OFF	ElectroStrainer Pro is powered ON but in the OFF state. No seawater is flowing through the system. In this mode, the display will show "0".	This is a normal operating mode, provided there is no seawater flow. See page 33 for details.
Smart Strainer Flow Alert®	The Smart Strainer Flow Alert® feature monitors seawater flow and notifies the user if the flow rate drops below the user-defined minimum seawater flow rate threshold value for a period of time. During a Strainer Flow Alert, STRAINER will flash on the display. Note: The Strainer Flow Alert is visual. There is no audible alert.	ElectroStrainer Pro will continue generating chlorine even after a Smart Strainer Flow Alert occurs. Note: If the flow rate is less than or equal to 7 gpm (26.5 lpm), then ElectroStrainer Pro will stop chlorinating seawater. If a Smart Strainer Flow Alert occurs • Check the vessel's strainers and intake grates for blockage. • Check the seawater pump operation. • Check all other components in the seawater intake fluid path. • Check the ElectroStrainer Pro Canister and rinse the Strainer Basket according to the instructions on pages 38-44.
Cell Indicator	The ElectroStrainer Pro CELL indicator will illuminate or flash in various conditions. A CELL indicator is not an immediate cause for concern and may be temporary depending on seawater salinity level. ElectroStrainer Pro will continuously attempt to generate chlorine and automatically resume standard operation when conditions are resolved.	**CELL indicator flashes, and the display cycles between "LO," "SA," and the flow rate**: • Water salinity is below 20 parts per thousand. This is the most frequent cause of the CELL indicator. Vessels often encounter brackish or fresh water when cruising inland or from extended storms and freshwater runoff. ElectroStrainer Pro will not generate chlorine, and the CLEANING indicator will not illuminate while the vessel is operating in fresh water. **RESOLUTION: Return vessel to seawater with adequate salinity.** • The ElectroStrainer Pro Control Head is not properly connected to the Cell. **RESOLUTION: Refer to the instructions on pages 11-13 to ensure the two (2) M6 Nuts are tightened securely and evenly.** • The connection point between the ElectroStrainer Pro Control Head and Cell Posts has debris or corrosion. **RESOLUTION: Follow the instructions on pages 11-13 to remove the Control Head, check the connection points for debris or signs of corrosion, and replace the Control Head, ensuring the M6 Nuts are tight and securely fastened.** • The ElectroStrainer Pro Cell has excessive mud or other debris. **RESOLUTION: Follow the instructions on pages 38-44 to rinse the Cell Screen or Cell with fresh water.** **CELL indicator illuminates and the display cycles between "E3" and the flow rate:** • Check for the conditions listed above. If the error persists, the ElectroStrainer Pro Cell is at the end of its useful life. When the Cell has reached the end of its useful life, it can no longer generate chlorine. The Cell life is dependent on flow rate, hours of use, seawater quality, and other factors. **RESOLUTION: See the table on page 3 for your replacement Cell part number and contact your ElectroSea Dealer or visit www.electrosea.com.**

TROUBLESHOOTING

ERROR	DESCRIPTION	ACTION
No Flow	When the ClearVis® Flow Sensor is not measuring seawater flow, “0” will be displayed, and the CLEANING indicator will not be illuminated. NOTE: This is a normal operating mode, provided there is no seawater flow.	If seawater is pumping, and “0” is still shown (1) Verify that the ClearVis Flow Sensor is installed correctly with the arrow pointing in the direction of seawater flow. (2) Check the ClearVis Flow Sensor Connection. Unplug the connection and inspect the pins and plugs to ensure the pins are fully seated, the wires are not damaged or pulled out, there are no cuts or splices in the cable, and there is no corrosion. (3) Look for an excess of turbulence in the seawater and inspect the water discharge if possible.
Low Flow	Low flow can be described as a significant decrease in seawater flow in reference to the baseline or optimum flow rate established when the seawater system is clean and descaled (such as at the time of installation).	Possible causes of low flow can be (1) A dirty or full Strainer Basket. Check the Strainer Basket following the steps on pages 38-44 and empty/clean as needed. (2) Growth or an obstruction before or after the ElectroStrainer® Pro Canister. Most commonly, there is growth in the untreated portion of plumbing before the ElectroStrainer Pro. Verify the thru-hull fittings are not obstructed and are fully open and operational. (3) A worn seawater pump or pump impeller. (4) A closed valve in the seawater system. Downstream equipment and the Chlorinated Return Line may be equipped with a valve for flow control.
Erratic Flow	Erratic flow is almost always caused by an excess of air/turbulence in the water that creates “noise.” Most commonly, the problem can be found on the suction side of the seawater pump.	Possible causes of turbulence include (1) A leak in the Canister gasket, suction hose from the thru-hull to the ElectroStrainer Pro, threads on a fitting before the seawater pump, or in a Chlorinated Return Line fitting. Identify and repair the leak accordingly. (2) Pump cavitation. (3) A full Strainer Basket. Check the Strainer Basket following the steps on pages 38-44 and empty/clean as needed.
Extended Period of No Use	If the ElectroStrainer Pro has been OFF and not generating chlorine for an extended period of time, it is possible that the seawater pipes have marine growth inside of them.	The chemicals used to perform an acid descaling will damage the Cell and void the Warranty. To perform an acid descaling after ElectroStrainer Pro installation, use a Maintenance Lid (ordered separately) to temporarily replace the Cell and ElectroStrainer Pro Control Head during the descaling process. Contact your ElectroSea® Dealer or visit www.electrosea.com for additional information.

Need additional troubleshooting help? Visit www.electrosea.com.

ERROR	DESCRIPTION	ACTION
FS	No Flow Sensor	The ClearVis® Flow Sensor is disconnected or experiencing a bad connection. Check that the ClearVis Flow Sensor is securely connected to the Control Head Wiring Harness. If the error persists, unplug the ClearVis Flow Sensor, check both connections for corrosion or bent pins, and reconnect the cables, ensuring the connection is secure. NOTE: If you are using the ClearVis Flow Sensor Extension Cable, check all connection points.
LO > SA	Low Salinity	A low salinity error may occur in various conditions. Follow the instructions on page 36.
E2	Cell Error	The Cell may be experiencing an internal electronics issue. Follow the instructions on page 38 to turn the ElectroStrainer® Pro OFF, unplug the Power Cable for 30 seconds, reconnect the Power Cable, and allow ElectroStrainer Pro to power ON. If the error persists, follow the instructions on pages 36-44 to rinse the Cell Screen or Cell with fresh water. If the error continues to persist, call your ElectroSea® Dealer or ElectroSea Service.
E3	Cell End of Life	The Cell may have reached the end of its useful life. Follow the instructions on page 36 to rule out other possible causes of this error. If the error persists, see the table on page 3 for your replacement Cell part number and contact your ElectroSea Dealer or visit www.electrosea.com.
E4	High Temperature	The ElectroStrainer Pro is experiencing high temperatures, and chlorine is being generated at 50%. Hot ambient temperature is the most common cause of this error. If the engine room is hot, wait for the area to return to a reasonable temperature and recheck the ElectroStrainer Pro. If the error persists, follow the instructions on page 38 to turn the ElectroStrainer Pro OFF, unplug the Power Cable for 30 seconds, reconnect the Power Cable, and allow ElectroStrainer Pro to power ON. If the error continues to persist, call your ElectroSea Dealer or ElectroSea Service.
E5	High Temperature	The ElectroStrainer Pro is experiencing excessively high temperatures, and chlorine is no longer being generated. If the engine room is hot, wait for the area to return to a reasonable temperature and recheck the ElectroStrainer PRO. If the error persists, follow the instructions on page 38 to turn the ElectroStrainer Pro OFF, unplug the Power Cable for 30 seconds, reconnect the Power Cable, and allow ElectroStrainer Pro to power ON. If the error continues to persist, call your ElectroSea Dealer or ElectroSea Service.
E6	Voltage Fault	The ElectroStrainer Pro is experiencing an electrical issue. Complete the following steps to resolve the issue: 1. Follow the instructions on page 38 to turn the ElectroStrainer Pro OFF, unplug the Power Cable for 30 seconds, reconnect the Power Cable, and allow ElectroStrainer Pro to power ON. 2. Follow the instructions on pages 38-44 to rinse the ElectroStrainer Pro Cell Screen or Cell with fresh water. 3 Follow the instructions on pages 11-13 to remove the Control Head, checking the Cell Posts for water. If the error continues to persist, call your ElectroSea Dealer or ElectroSea Service.
E7	Current Fault	
E8	Cell Shorted	
CELL Indicator Flashing – No Error Code	Cell Connection	The Control Head is not properly secured to the Cell. This error will only occur within the first 24 hours after initial installation of an ElectroStrainer Pro. Refer to the instructions on pages 11-13 to ensure the two (2) M6 Nuts are tightened securely and evenly. If the error persists, follow the instructions on pages 11-13 to remove the Control Head, checking for debris inside the recessed areas of the Control Head or under the Control Head.

Contact ElectroSea® for service or spare parts.

Service: support@electrosea.com | (561) 257-5739

Sales: sales@electrosea.com | (952) 475-8084

Please visit our website to view our full Warranty terms and conditions: www.electrosea.com/warranty

COPYRIGHT © 2024-2026 No part of this publication may be reproduced, translated, stored in a retrieval system, or transmitted in any form or by any means electronic, mechanical, photocopying, recording, or otherwise without the prior written consent of ElectroSea, LLC. Every precaution has been taken in the preparation of this manual to ensure its accuracy. ElectroSea assumes no responsibility for errors and omission. Neither is any liability assumed for damages resulting from the use of this product and information contained herein.

ELECTROSEA®

EXPERTS IN MARINE GROWTH PREVENTION SYSTEMS®

(888) 384-8881
(952) 475-8084

www.electrosea.com

© 2024-2026 ElectroSea. All Rights Reserved.

ElectroSea's products are designed, assembled and quality-control tested at our headquarters in Minneapolis, Minnesota, USA.

Protected by one or more patents. For a comprehensive list of intellectual property and patent markings, visit www.electrosea.com/patents.

REV F