ELECTROSEA®
EXPERTS IN MARINE GROWTH PREVENTION SYSTEMS®

SEASTRONG SOLIDDRIVE™

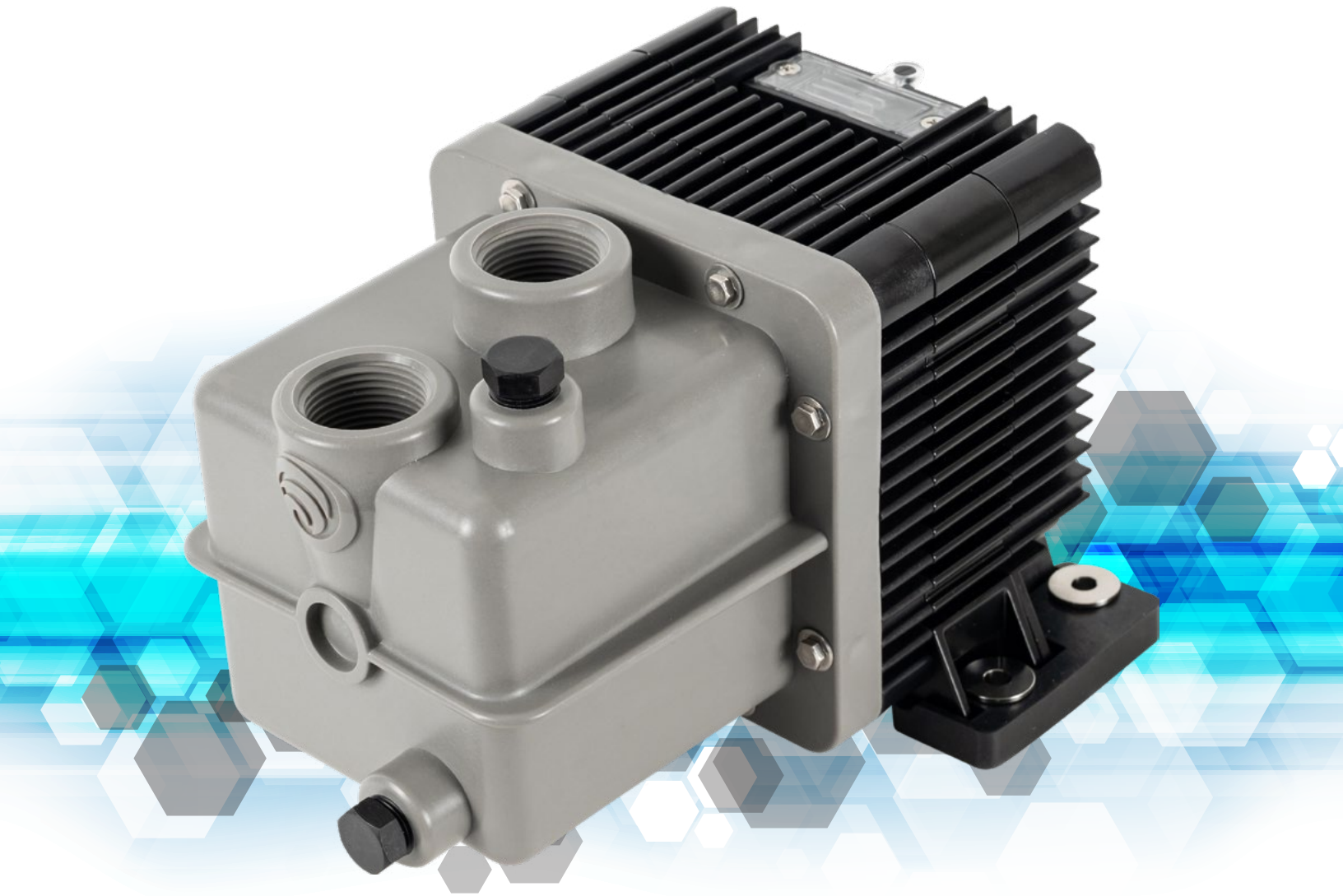

VARIABLE-SPEED, SELF-PRIMING DIRECT MAGNETIC-DRIVE PUMP

SeaStrong SolidDrive

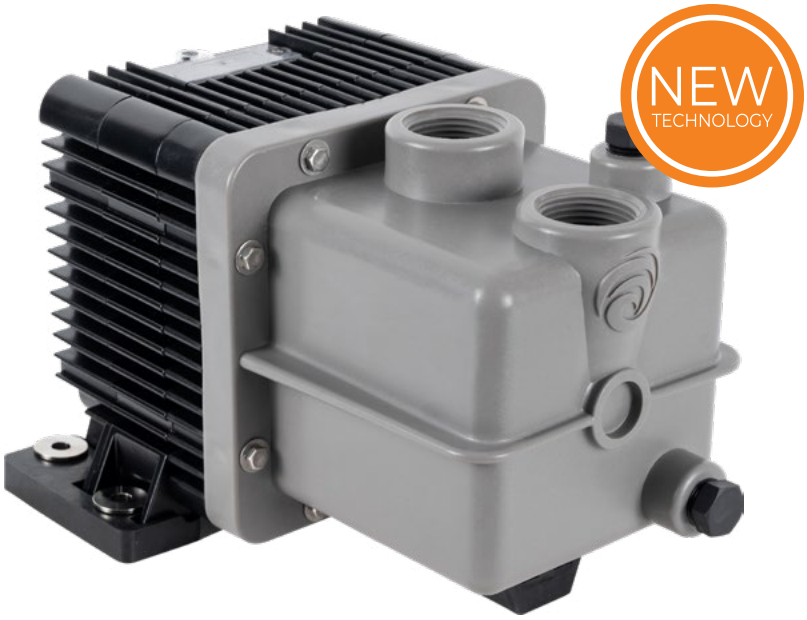

VARIABLE-SPEED SEAWATER PUMP

SolidDrive™ offers nine selectable flow rates so you can dial in the exact flow for your seawater application. With only one moving part and a sealless, direct magnetic-drive design, SolidDrive delivers quiet, reliable performance you can count on. Its SurePrime™ pump head keeps air from disrupting operation – whether you're lowering your boat into the water after being on a lift or backing down on a fish – and lets you mount the pump up to 4 feet above the waterline.

THE RIGHT FLOW, EVERY TIME

Variable Speed

Selecting the right pump for your boat just got easier. Nine impeller speed settings let you match the pump to your system in seconds – even after it's installed. No head-pressure math, no swapping pumps, no re-plumbing when the system changes. One pump. Nine speeds. Perfect flow.

QUIETER, MORE RELIABLE

Direct Magnetic Drive

The sealless design has only one moving part – eliminating the motor shaft and several other components that are common sources of corrosion and wear in traditional pumps. Fewer parts means fewer failure points: no shaft seizures, no seal leaks, and quieter operation.

ALWAYS PRIMED, ALWAYS READY

SurePrime

SurePrime technology lets SolidDrive be mounted below the waterline or up to 4 feet above it. If air enters the system, or the boat has been on a lift, SolidDrive stays primed and ready – no bleeder valves, no manual priming, no venting the air from the system. Just a reliable prime, every time.

NINE SPEED SETTINGS, FLOW UP TO 23 GPM*

ONLY ONE MOVING PART, GREATER RELIABILITY

SELF-PRIMING ABOVE OR BELOW THE WATERLINE

**Actual performance depends on feet of head.*

PERFORMANCE & DIMENSIONS

ONE PUMP, NINE SELECTABLE FLOW CURVES

60 HZ · SEA LEVEL · 68 °F (20 °C) · SG 1.0

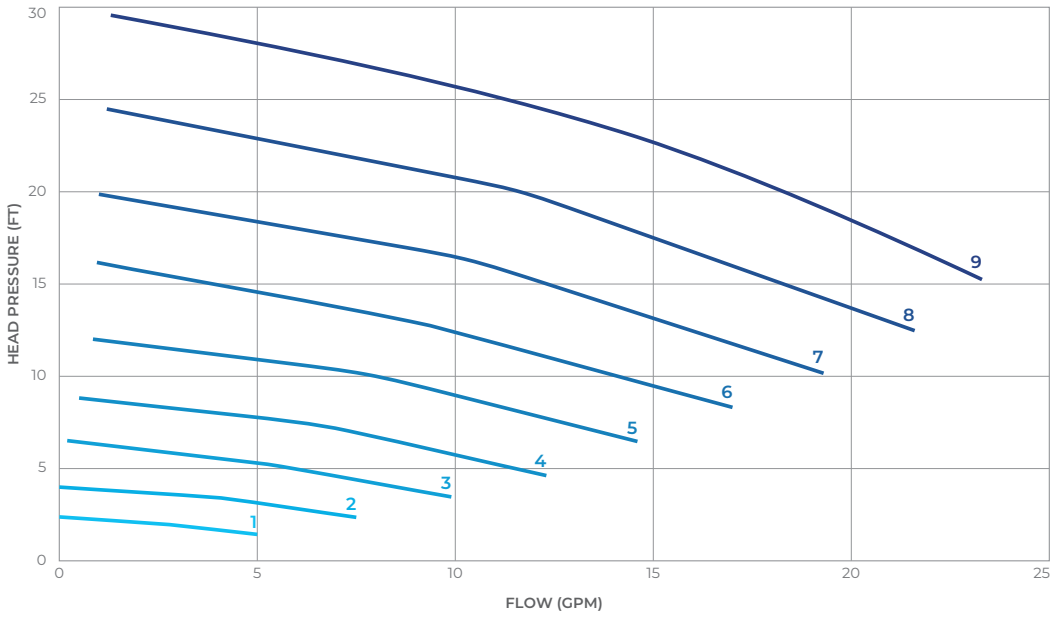

SD02-SP SPEED SETTINGS

SPEED SETTING	TYPICAL (GPM)	BEST EFFICIENCY (GPM)	MAX* (GPM)
9	8 to 16	12	23
8	7 to 15	11	22
7	6 to 13	9	20
6	5 to 12	8	17
5	4 to 11	7	15
4	3 to 9	6	12
3	2 to 7	5	10
2	<5	3	8
1	<3	2	5
0	OFF	OFF	OFF

Actual performance depends on feet of head.

DIMENSIONS

OVERALL DIMENSIONS: 10.5” (L) · 7.7” (W) · 6.5” (H)

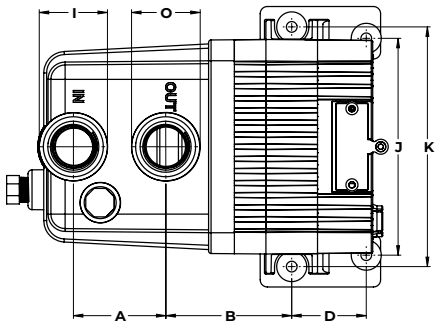

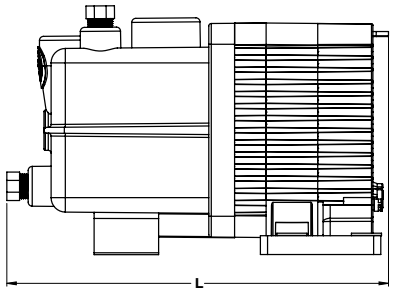

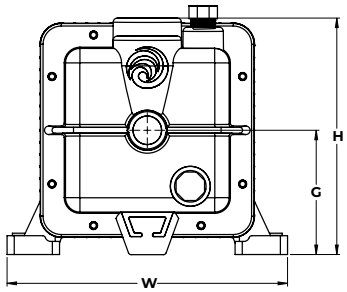

A	B	D	G	H	I (NPT) Suction	J	K	L	O (NPT) Discharge	W
2.54 in 64.5 mm	3.46 in 87.8 mm	2.05 in 52.0 mm	3.41 in 86.7 mm	6.49 in 165.0 mm	1.00 in 25.4 mm	5.96 in 151.3 mm	6.58 in 167.2 mm	10.48 in 266.3 mm	1.00 in 25.4 mm	7.70 in 195.7 mm

Flexible mounting: SolidDrive’s feet can be rotated for flexible mounting.

SPECIFICATIONS

Inlet (FNPT)	1 in / DN25	Voltage	115 / 230 VAC
Outlet (FNPT)	1 in / DN25	Phase	1
Max flow	23 gpm / 87 lpm	Amps	5.2 / 2.6
Max head	29 ft / 8.8 m	Weight	8.7 lb / 4.0 kg

SCAN HERE FOR MORE INFORMATION

THE ELECTROSEA FAMILY

At ElectroSea®, innovation means finding a better way. Our team of engineers and boaters reimagines how onboard systems should work, tackling marine growth, seawater flow, and humidity as engineering challenges, with one goal: a better boating experience. The result is real reliability, less time in the engine room, and more time on the water.



ElectroStrainer

Marine Growth Prevention

All-in-one sea strainer and marine growth prevention system. ElectroStrainer® replaces your A/C seawater strainer and generates a safe and effective low level of chlorine, to stop barnacles, biofilm, and algae from building up in cooling lines.

Fewer strainer cleanings | **No acid descaling** | **No chemical additives**



SeaStrong

Seawater Pumps

Sealless, magnetic-drive seawater pumps engineered from millions of actual run hours in the toughest marine conditions. The SeaStrong® line includes the Silver Bullet RDP, warrantied against run dry, and the new SolidDrive™, self-priming, variable speed pump.

Sealless magnetic drive | **Run-Dry Protection** | **Built for reliability**



DryGenie

Marine Dehumidifier

A compact marine dehumidifier, built to handle the motion of life on board. Three times more powerful than similarly sized units, DryGenie™ fights mold, mildew, and corrosion in the small, enclosed spaces on your boat, so it stays dry and fresh between trips.

Fights mold & mildew | **Powerful, compact** | **Lightweight**

ELECTROSEA®
EXPERTS IN MARINE GROWTH PREVENTION SYSTEMS®

(888) 384-8881
(952) 475-8084

www.electrosea.com

© 2026 ElectroSea. All Rights Reserved.

ElectroSea's products are designed, assembled and quality-control tested at our headquarters in Minneapolis, Minnesota, USA.

Protected by one or more patents. For a comprehensive list of intellectual property and patent markings, visit www.electrosea.com/patents.

REV A