ELECTROSEA®
EXPERTS IN MARINE GROWTH PREVENTION SYSTEMS®

SEASTRONG SOLIDDRIVE™



INSTALLATION AND OPERATION MANUAL

VARIABLE-SPEED, SELF-PRIMING, DIRECT MAGNETIC-DRIVE PUMP

SD02-SP

TABLE OF CONTENTS

INTRODUCTION

- Table of Contents 2
- ElectroSea 3
- SeaStrong SolidDrive 3
- Safety Precautions 3-6
- Key Components 7
- Unpacking & Inspection 7

INSTALLATION

- Mounting 8-9
- Plumbing 10-11
- Electrical Connection 12

OPERATION

- Pump Operation 13-15

MAINTENANCE

- Pump Disassembly & Inspection 16-18
- Pump Reassembly 19-20

REPLACEMENT KITS

- Wear Component Replacement 21-22

DIAGRAMS AND PART LIST

- Pump Diagram 23
- Spare Parts Guide 24

TROUBLESHOOTING

- Status Lights & Troubleshooting 23

WARRANTY POLICY

Please visit our website to view our full warranty terms and conditions: www.electrosea.com/warranty

Please read these instructions carefully and follow all instructions, guidelines, and warnings stated in this product manual to guarantee the correct installation, usage, and maintenance at all times. Keep instructions with product for future reference.

By using the product, you hereby affirm that you have thoroughly read and understood all instructions, guidelines, and warnings contained herein. You acknowledge and consent to comply with the terms and conditions set forth in this document. It is understood that the product shall be used solely for its intended purpose and application, adhering to the instructions, guidelines, and warnings as specified in this product manual and in accordance with all relevant laws and regulations.

Failure to read and adhere to the provided instructions and warnings may lead to potential injuries to yourself and others, damage to the product, or harm to surrounding property. Please be aware that this product manual, including its instructions, guidelines, and warnings, may be subject to modifications and updates. To access the most current product information, visit www.electrosea.com.

COPYRIGHT © 2026 No part of this publication may be reproduced, translated, stored in a retrieval system, or transmitted in any form or by any means electronic, mechanical, photocopying, recording or otherwise without prior written consent by ElectroSea, LLC. Every precaution has been taken in the preparation of this manual to ensure its accuracy. ElectroSea assumes no responsibility for errors or omission. Neither is any liability assumed for damages resulting from the use of this product and information contained herein.

ELECTROSEA®

ElectroSea was created when the owners of a sportfishing vessel invented “a better way” to prevent biofouling in their seawater cooling system. Solving complex technical problems is our expertise. Our executive management team has been developing innovative solutions for more than 50 years. With an expert team of “old salts” who eat, sleep, and breathe boating, ElectroSea will improve your time on the water.

SEASTRONG SOLIDDRIVE™

ElectroSea’s SeaStrong SolidDrive is a variable-speed, self-priming direct magnetic-drive marine pump that carries forward the proven reliability of the SeaStrong line. Its sealless direct magnetic drive has just one moving part, the impeller. That eliminates the motor shaft, shaft seals, and other common sources of corrosion, leaks, and wear in traditional pumps. SurePrime™ technology delivers a reliable, flapless prime every time, lifting water up to 4 feet above the waterline with no bleeder valves, manual priming, or venting air from the system. Nine selectable impeller speeds let you match the pump to your system in seconds, even after it’s installed, with no re-plumbing or swapping pumps. SolidDrive is the next evolution in SeaStrong marine pump engineering for seawater applications.

SAFETY PRECAUTIONS

WARNING: READ THIS MANUAL COMPLETELY BEFORE INSTALLING AND OPERATING THIS UNIT. FAILURE TO FOLLOW THESE PRECAUTIONS CAN RESULT IN SERIOUS INJURY OR DEATH.

The following safety alert symbols are used to alert you to potential physical injury hazards. Obey all safety messages that follow these symbols to avoid possible injury or death.

DANGER! This symbol indicates a hazardous situation that, if not avoided, will result in death or serious injury.

WARNING: This symbol indicates a hazardous situation that, if not avoided, could result in death or serious injury.

CAUTION: This symbol indicates a hazardous situation that, if not avoided, could result in minor or moderate injury.

NOTICE: This symbol is used to address practices not related to physical injury and indicates additional information that is not related to physical injury.

SAFETY PRECAUTIONS

SUPPLEMENTAL DIRECTIVES

To reduce the risk of accidents and injuries, please observe the following directives before proceeding to install or operate this product. The installation must comply with all applicable local or national codes, including the latest edition of the following standards:

U.S.A.

- ANSI/NFPA70, National Electrical Code (NEC)
- American Boat and Yacht Council (ABYC)

Canada

- CSA C22.1, Parts I & II, Canadian Electrical Code

GENERAL SAFETY CONSIDERATIONS

WARNING: MAGNETIC HAZARD. Failure to obey the following warnings could result in death or serious injury:

- **This pump contains powerful magnets. Exposed magnets (pump not connected to motor) produce powerful magnetic fields. Individuals with cardiac pacemakers, implanted defibrillators, other electronic medical devices, metallic prosthetic heart valves, internal wound clips (from surgery), metallic prosthetic devices, or sickle cell anemia must not handle or be in the proximity of the magnets contained inside the pump. If any of these conditions apply to you, then consult a health care provider for specific recommendations before working with this pump.**
- **This pump should only be disassembled and assembled using the recommended procedures. The magnetic attraction is powerful enough to rapidly pull the motor end and the impeller together. Do not place fingers between the mating surfaces of the motor and impeller to avoid injuries. Keep the impeller assembly away from metal chips, metal particles, or items with magnetic stripes, such as credit cards and magnetic computer media.**

WARNING: ELECTRICAL SHOCK, FIRE, AND/OR EXPLOSION, AND MECHANICAL HAZARD. Failure to obey the following warnings could result in death or serious injury:

- **Do not pump flammable or combustible liquids.**
- **The pump is NOT submersible. Do NOT submerse the pump or operate in standing water.**
- **Before attempting to make any electrical connections, ensure the electrical power is off and the water valves are completely closed.**
- **Secure and seal all wire connections to protect from arcing.**

SAFETY PRECAUTIONS

- Do not modify this product in any way. Modification can be extremely hazardous.
- Read all pump labels and ensure the power supply meets the requirements and labeled specifications.

WARNING: FLOOD/LEAK HAZARD. Failure to obey the following warnings could result in death or serious injury:

- Never run the pump at less than minimum flow or with the discharge valve closed.
- Do not start or operate the pump with the suction valve closed.
- Do not continue to operate the pumping system when a known leak exists.
- Do not perform service or maintenance when the pumping system is pressurized.
- Do not use PTFE on plastic connections.
- For Marine Vessels:
  - Use marine-grade hose and double clamp with two stainless-steel clamps, reversing the clamps. Failure to properly secure seawater connections could result in sinking the vessel.
  - All seawater plumbing connections must be performed by a qualified marine installation professional.
  - When mounting in the bilge, do not drill through the hull of the boat.
  - Avoid over-tightening parts as they may crack and result in sinking the vessel.

WARNING: BURN HAZARD. Failure to obey the following warnings could result in death or serious injury:

- The motor is designed to run at temperatures up to 240 °F (115 °C) external. Do not touch during operation.

WARNING: CHEMICAL HAZARD. Failure to obey the following warnings could result in death or serious injury:

- Always wear protective clothing and eye protection when handling chemicals that may be used to operate or maintain the pump.
- Follow standard safety procedures when handling corrosive or personally harmful materials that may be used with the pump.
- Follow proper procedures for draining and decontaminating the pump before performing maintenance on it.

SAFETY PRECAUTIONS

WARNING: OTHER HAZARDS. Failure to obey the following warnings could result in death or serious injury:

- This pump has components that rotate while in operation. Always lockout the motor before servicing. Always disconnect the pump, including all connected equipment, from the power source before servicing.
- The pump and associated components are heavy. Failure to properly support the pump during lifting and movement could result in serious injury or damage to the pump and components.

INSTALLATION AND OPERATION PRECAUTIONS

NOTICE:

- This pump should never be operated without liquid in the casing or at less than minimum flow. This can create a RUN-DRY CONDITION THAT MAY DAMAGE THE PUMP.
- Never start or operate with a closed suction valve and/or a closed discharge valve.
- Do not continue to operate the pump when unusual noise or vibration occurs.
- Always provide adequate NPSHa (net positive suction head available). It is recommended to provide at least 2 feet (61 cm) above the NPSHr (net positive suction head required).
- DO NOT decrease seawater flow below the manufacturer's specifications for downstream cooling equipment.
- Limit the use of 90˚ elbows as they restrict flow and cause pressure drop.
- Use only original parts supplied by ElectroSea. They are made of special high-quality composites and other materials.
- Operating the pump with water containing sand, shell particles, or other small debris will cause premature wear and pump damage, and is not covered under warranty.

KEY COMPONENTS

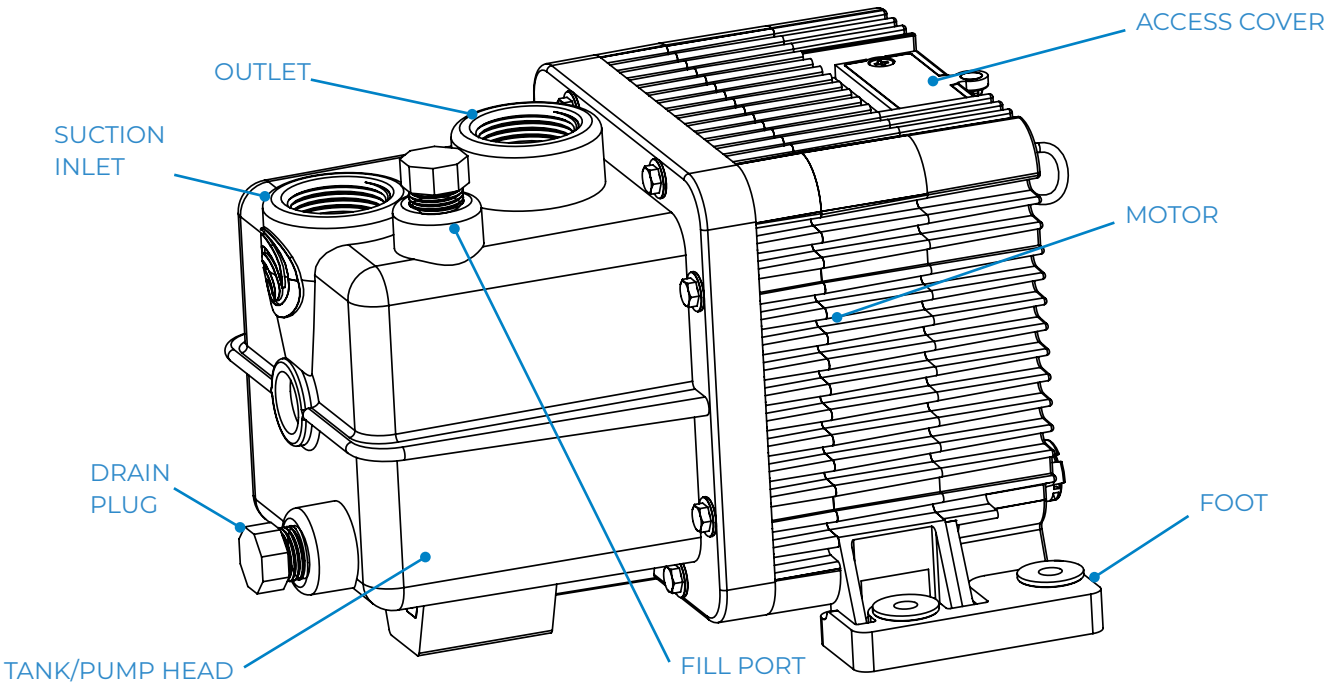

UNPACKING & INSPECTION

Unpack the pump and examine it for any signs of shipping damage. If any damage is detected, save the packaging and notify the carrier immediately.

MOUNTING

NOTICE: Failure to obey the following instructions could result in damage to the pump or components and cause property damage.

MOUNTING CONSIDERATIONS

The pump feet must be securely fastened to a solid foundation. The pump is intended for horizontal mounting with the input and output ports on the top.

- **Waterline**
  - The pump will operate most efficiently when mounted below the waterline.
  - The SD02-SP is a self-priming pump and can operate at or above the waterline (up to 4 ft depending on plumbing). Since priming height depends on the plumbing, it is best to mount the pump as low as possible.
- **Level Horizontal Position**
  - Place the pump in a location that will allow mounting in a level, horizontal position on a secure foundation.
- **Motor Vibration Mount/Foot**
  - The SD02-SP comes standard with vibration mounts/feet. These should not be removed.
- **Mounting Hardware Mounting**
  - Use appropriate hardware for mounting to the chosen location. Ensure hardware is the correct length so it does not go through the material being mounted to. Do NOT screw through the hull. Do NOT attach to the wall of any fluid-containing areas, such as fuel or water tanks.
- **Ventilation**
  - The installation location must allow for air flow around the pump for proper operation and cooling of the motor.

ROTATING THE PUMP HEAD (OPTIONAL)

The pump is preconfigured with a bottom foot-mount orientation. When preparing the pump for installation, it may be necessary to rotate the pump feet to improve the ease of installing the pump and associated piping. Rotating the pump feet is optional and should be done before mounting the pump. Make sure the O-ring is properly seated in the groove after rotating. The pump input and output ports must always be on the top, regardless of foot orientation. To rotate the feet, the pump head must be disconnected, turned 90 degrees, and reconnected. See the disassembly and reassembly instructions for information on this process.

MOUNTING

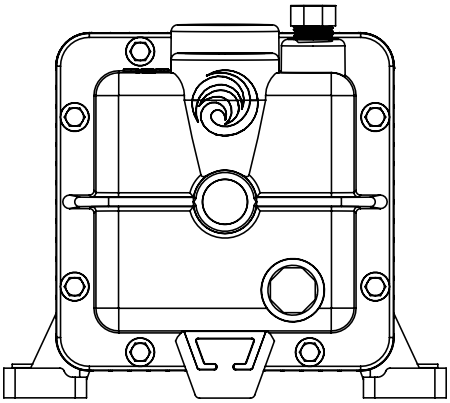

BOTTOM MOUNT

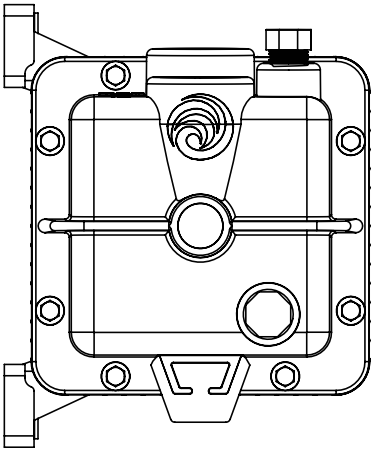

LEFT MOUNT

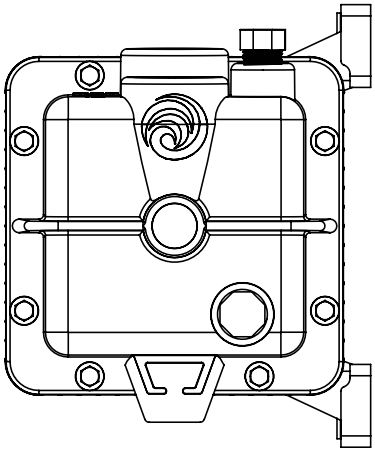

RIGHT MOUNT

The pump input and output ports must always be on the top regardless of foot orientation.

MOUNTING THE PUMP

- Place the pump motor in the desired location and mark the position of the mounting holes.
- If using screws, predrill holes for the mounting screws.
- Make sure that holes are NOT being drilled through the hull of the boat as this could sink the vessel.
- Screw/bolt the pump into position. The screws or bolts should go through the isolation T-spacers. T-Spacers have washers built in and can be screwed down tightly. There is an elastomer foot between the spacer and the rest of the pump with reduced vibration and noise.

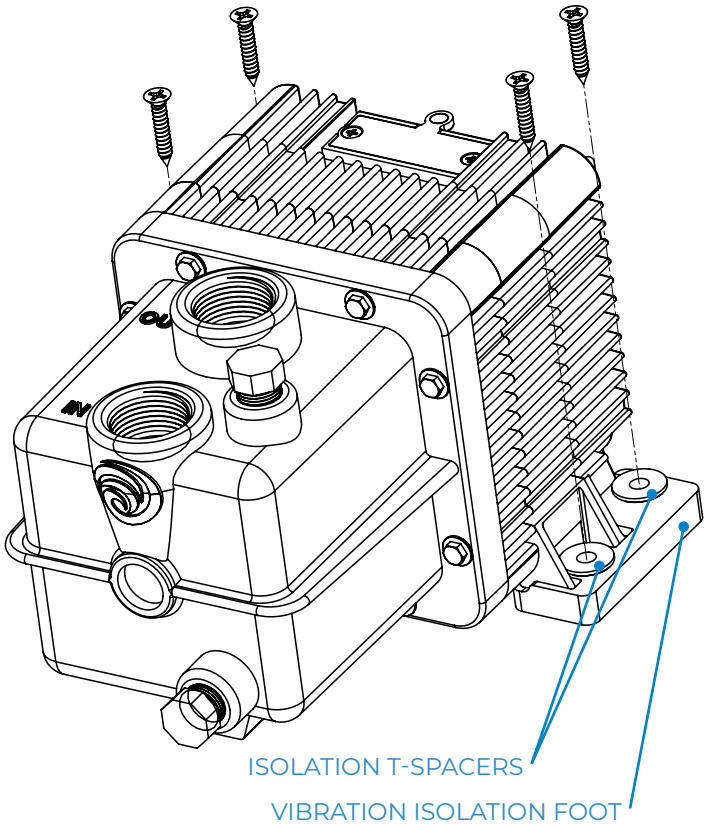

PLUMBING

Follow all national and local plumbing standards and codes for marine vessel plumbing. Ensure seacocks are closed before removing, changing, or fixing any plumbing. Plumbing should be performed by a qualified technician.

WARNING: Failure to close all seacock valves can result in sinking the vessel and severe injury.

WARNING: DO NOT overtighten fittings to the pump. Connections should be hand tightened as much as possible and then tightened about one-half turn with a wrench. Extreme care should be taken if using metal fittings as they can be overtightened and crack the pump head.

WARNING: DO NOT use PTFE-based tape or sealants because they lead to overtightening. Use a non-PTFE plastics-compatible thread sealant, such as Spears Blue 75 thread sealant.

NOTICE: Metal fittings can damage the pump head; care must be taken if threading metal fittings into the pump.

NOTICE: Installer must verify that the flow rate meets consumer requirements (air conditioning, refrigeration, hydraulics, etc.) after pump installation. Damage may occur if the supplied flow is greater or less than the specified requirements of the connected systems.

- **Unrestricted Suction**
  - It is important to provide unrestricted flow to the pump on the suction side.
  - Strainers and pipe/hose diameter should be the same size or larger than the input size of the pump.
  - Avoid additional right-angle fittings when possible. Suction-line plumbing should be as straight as possible. A single right-angle fitting is required on the input port self-priming operation.
  - Keep bends, valves, strainers, and other fittings away from the suction inlet at a distance of at least 10 times the diameter of the suction inlet.
  - Suction line distance from the thru-hull to the pump should be as short as possible.
  - The suction line should be at least as large as the suction inlet port or one pipe size larger so that it does not affect the NPSHa (net positive suction head available). Do not reduce the suction line size.
- **Debris and Filtration**
  - A strainer should be used on the inlet pipe to remove debris before the liquid or seawater enters the pump.
  - Operating the pump with water containing sand, shell particles, or other small debris will cause premature wear and pump damage, and is not covered under warranty.
- **Support Weight of Plumbing**
  - Input and output plumbing should be supported near the pump head to eliminate stress on the pump.

PLUMBING

- **Flooded Suction**
  - The pump will operate most efficiently below the waterline where the pump head is filled with water via gravity. If the pump cannot be installed below the waterline, mount it as low as possible, up to a maximum of 4 feet above the waterline. The closer it is to the waterline, the more efficient it will be. To avoid air pockets, the suction line should not have any high spots. The suction hose/piping should be as level as possible or angled slightly upwards toward the pump.
  - For proper operation the following plumbing conditions must be met:
    - A right-angle fitting must be used on the pump inlet to ensure proper air release to keep the tank at least half full.
    - If using an ElectroStrainer with a Chlorinated Return Line, the Return Line must go to a location significantly below the waterline. Chlorinated water can not return to a section of plumbing above the waterline.
    - Strainers before the pump should be located below the waterline to ensure air is not trapped.
    - Use marine-grade raw-water hose only.
    - Avoid high and low plumbing to reduce the possibility of air locks.
    - Above-water discharge works best when the pump is above the waterline.
- **NPT Threaded Connections**
  - DO NOT overtighten fittings to the pump head. Connections should be hand tightened as much as possible and then tightened about one-half turn with a wrench. Extreme care should be taken if using metal fittings as they can be overtightened and crack the pump head.
- **Valves**
  - Isolation valves on the suction and discharge lines can be used to make the pump accessible for maintenance.

ELECTRICAL CONNECTION

WARNING: Always disconnect all electrical connections to the pump before beginning any work on it.

NOTICE: Refer to the wiring diagram affixed to the pump.

To ensure the safety of the installer and the vessel, it is important to disconnect power from all systems and supply lines before working on electrical connections. Electrical work should be performed by a qualified technician.

- Prior to connecting to power, check the nameplate specifications and ensure proper grounding.
- Check the pump voltage, frequency, and phase to ensure it matches the installation power source. Verify the supply circuit matches the label voltage, phase, and frequency. DO NOT install the pump if there are any differences.
- The pump must be connected to a circuit-protection device, such as a fuse or circuit breaker of appropriate size per applicable codes.
- Use appropriate electrical-box connections to ensure the electrical junction box is watertight.
- Follow all applicable National Electric Code, NEMA MG-2, IEC, and ABYC standards, requirements, and local electrical codes.

WIRE COLORS/CONNECTIONS	
Green	Ground
White	Neutral
Black	Hot (Line/Phase 1)

PUMP OPERATION

WARNING: Never start or run the pump dry. Always prime the pump before starting. This is a self-priming pump, but needs water added to the tank before first operation. In normal operation, the pump will keep enough water in the tank when turned off to re-prime automatically. If significant time has passed since the last correct operation, additional water may be needed to allow the pump to re-prime.

WARNING: Pay careful attention when cleaning the sea strainer to bleed all air from the seawater strainer and seawater pipes. After maintenance, refill the pump head to replace lost water.

WARNING: Running the pump dry, even a short time, can cause permanent damage and is NOT covered under Warranty.

NOTICE: Operating the pump with water containing sand, shell particles, or other small debris will cause premature wear and pump damage, and is not covered under warranty.

CONFIGURE THE PUMP

This is a variable-speed pump, meaning the speed and flow rate can be changed by setting the Speed Selector Switch.

PUMP SPEED	
0	OFF
1	Lowest Speed
9	Highest Speed

To change the speed:

1. Remove the access cover. Use a Philips screwdriver to remove the two screws holding the access cover to the pump. Put these screws in a safe location so they are not lost.
2. Using a small flathead screwdriver, turn the Speed Selector Switch to the desired location. Decrease the number to decrease the flow. The minimum flow rate will depend on your specific plumbing. Lower speeds have lower pressure. If the speed/pressure is set below your system's minimum head, water will not flow.
3. Replace the access cover. Use a Philips screwdriver to tighten the two screws holding the access cover to the pump. They should be hand tight, do not use excessive force.

PUMP OPERATION

Use this table as a general guide of flow rate. This is only a guide and can change dramatically based on your system. Keep in mind that MAX flow is not feasible, flow rates will be well below max on any pump due to system head.

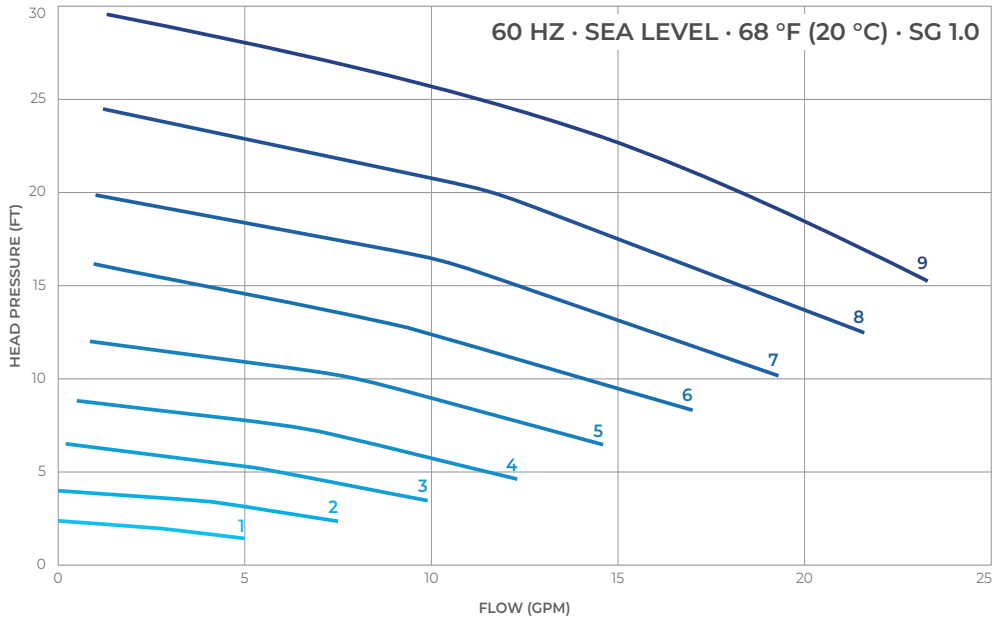

SD02-SP SPEED SETTINGS

SPEED SETTING	TYPICAL (GPM)	BEST EFFICIENCY (GPM)	MAX* (GPM)
9	8 to 16	12	23
8	7 to 15	11	22
7	6 to 13	9	20
6	5 to 12	8	17
5	4 to 11	7	15
4	3 to 9	6	12
3	2 to 7	5	10
2	<5	3	8
1	<3	2	5
0	OFF	OFF	OFF

Actual performance depends on feet of head.

FILL THE PUMP

This is a self-priming pump, but needs water added to the tank before first operation. In normal operation, the pump will keep enough water in the tank when turned off to re-prime automatically. If significant time has passed since the last correct operation, additional water may be needed to allow the pump to re-prime. The tank must be at least half full for self-priming to work. On first use, fill the tank completely.

4. Turn OFF power to the pump at the breaker.
5. Open the inlet (suction) and outlet (discharge) valves completely and ensure the pump, strainer, and pipes fill with water on their own.
6. If the pump does not fill with water on its own, close the inlet and outlet valves completely. Then open the fill port on top of the pump tank by unthreading the fill plug and fill the tank with water. Screw the fill plug back into the fill port ensuring it is secure to avoid leaks. Open the inlet (suction) and outlet (discharge) valves completely.

NOTICE: DO NOT turn the pump ON until it is at least half full with water. If air is trapped in the top of the strainer, bleed it out before continuing.

PUMP OPERATION

START THE PUMP

7. Turn ON power to the pump at the breaker.
8. Confirm seawater is flowing properly. If there are any flow issues, turn the pump OFF.
9. The pump will run at a faster priming speed during startup to prime the pump. Depending on pipe length and location with respect the waterline, priming can take up to 2 minutes, but is usually less than this.
10. If needed, adjust the flow rate using the Speed Selector Switch.

PUMP DISASSEMBLY & INSPECTION

SeaStrong pumps should be kept clean and monitored to ensure proper operation. Do not operate the pump if there are leaks or damage to the pump.

- Clean the pump with a damp rag. DO NOT spray with high-pressure liquids.
- If storing in a cold climate, drain all water from the pump to prevent damage from freezing.
- For best results, the pump should be examined on an annual basis and after the first six months of operation.

The SeaStrong pump should only be disassembled for scheduled maintenance inspection or to resolve issues. The following instructions are used for removing the wet end of the pump and disassembling it to inspect for wear or damage.

WARNING: ROTATING PARTS. The pump contains a moving parts that rotates while it is running. Adhere to the relevant safety regulations and disconnect the motor from the power source when conducting maintenance or servicing.

WARNING: MAGNETIC-FORCE HAZARD. Follow only the prescribed procedures when disassembling and reassembling this pump. The magnetic force is sufficiently strong to swiftly draw together the motor end and impeller. To prevent injuries, refrain from putting your fingers between the connecting surfaces of the motor and impeller. Keep the impeller assembly clear from any metal chips or particles.

WARNING: CHEMICAL HAZARD. This pump may be used for the transfer of various potentially hazardous chemicals. Always wear protective clothing and eye protection and adhere to established safety protocols when managing corrosive or harmful substances. It is essential to meticulously execute the correct methods for draining and decontaminating the pump before proceeding with its disassembly and inspection. It is possible that trace amounts of chemicals could be present during the inspection process.

NOTICE: Reference page 23, Diagrams and Part List, for component names.

1. Turn OFF power to the pump at the breaker.
2. Close all valves connected to the pump and flush and drain all fluid.

NOTICE: If using hazardous chemicals or fluids at high temperature, decontaminate the pump and allow the pump to reach ambient temperature before proceeding.

3. Disconnect all hoses and fittings connected to the pump inlet and outlet.
4. If possible, remove the pump from its operating location so it can more easily be worked on. Clamp or secure the motor to a stable surface.

PUMP DISASSEMBLY & INSPECTION

5. Remove the eight (8) tank bolts and flat washers securing the tank to the motor. Fully remove this hardware and set aside so they do not get lost.

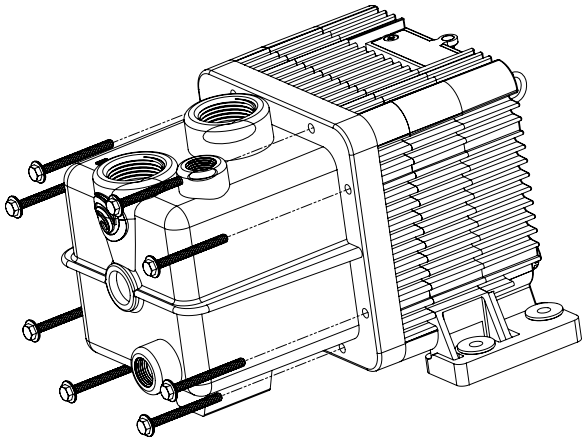

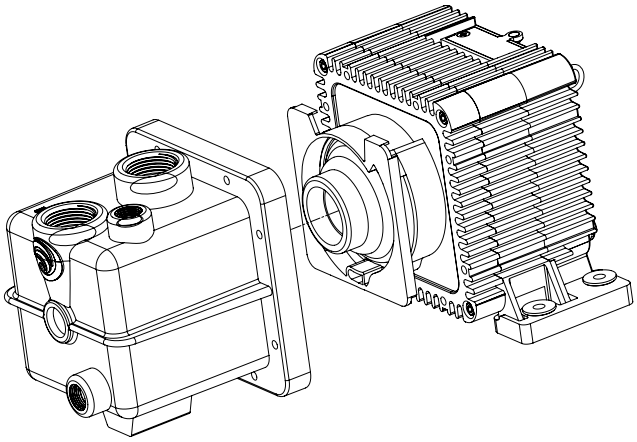

6. Firmly grab the tank assembly and pull straight back to disengage the motor and the tank assembly.

7. Inspect the pump volute face and motor barrier for signs of wear or damage.

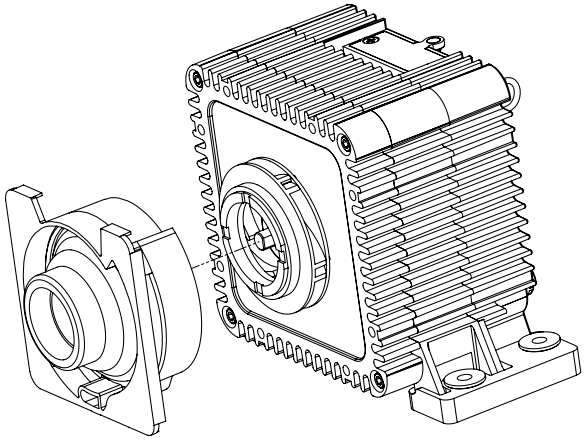

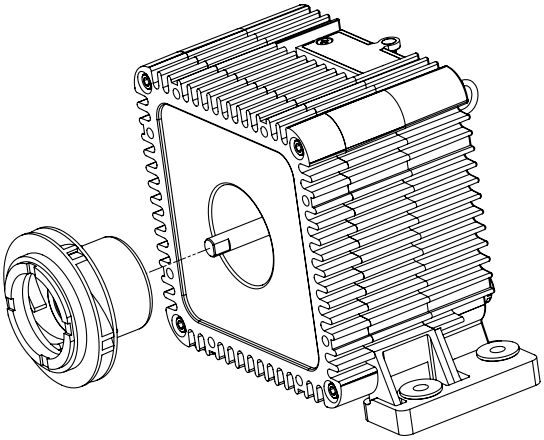

PUMP DISASSEMBLY & INSPECTION

9. Remove the impeller assembly. Replace any parts that appear worn or damaged.
   a. **Impeller bushing inspection** – A significantly worn bushing can lead to permanent damage to the pump. The impeller bushing should fit snugly on the impeller shaft.

      If the hole in the bushing is oblong and not round, replace the impeller bushing.

      If the impeller assembly wobbles on the shaft, measure the internal diameter of the impeller bushing. If the internal diameter is larger than what is listed in the table below, replace the impeller bushing (included in the Wear Kit).

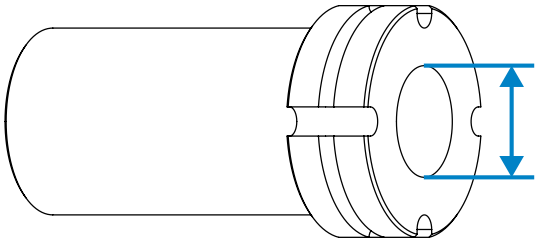

SEASTRONG PUMP MODEL	MAXIMUM IMPELLER BUSHING INNER DIAMETER
SD02-SP	0.400 in

   b. **Impeller thrust ring inspection** – A significantly worn thrust ring can lead to permanent damage to the pump. The thrust ring should protrude from the composite impeller. Excessive negative suction pressure can cause the thrust ring to contact the pump face and wear. If the wear indicator depth on the thrust ring is less than 0.032 in, replace the impeller thrust ring (included in the Wear Kit). Inspect the impeller shaft for signs of cracking, chipping, scoring, or wear. Remove the O-ring from the barrier and inspect for degradation, chemical attack, swelling, brittleness, cuts, etc. If any parts appear worn or damaged, replace parts included in the Wet End Kit.

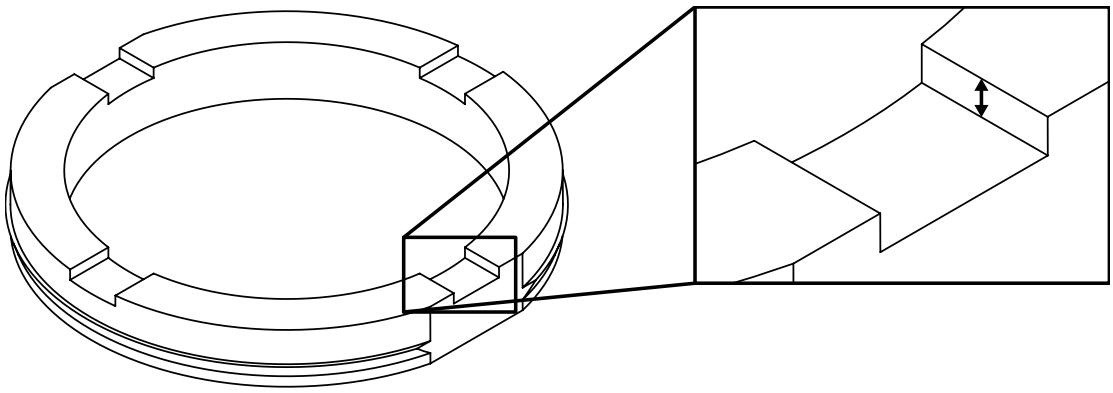

SEASTRONG PUMP MODEL	MINIMUM THRUST RING DEPTH
SD02-SP	0.032 in

PUMP REASSEMBLY

1. Install the volute if it was removed from the tank (see O-Ring / Volute Replacement instructions on page 20).

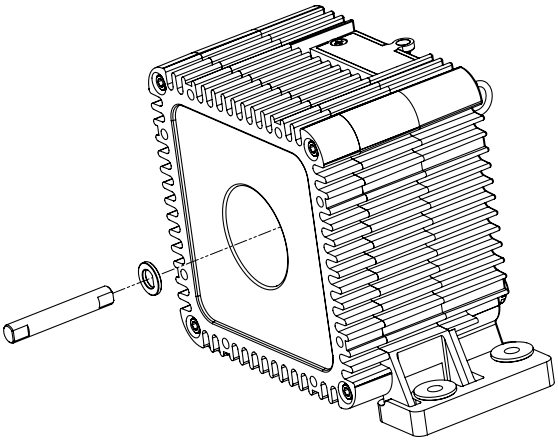

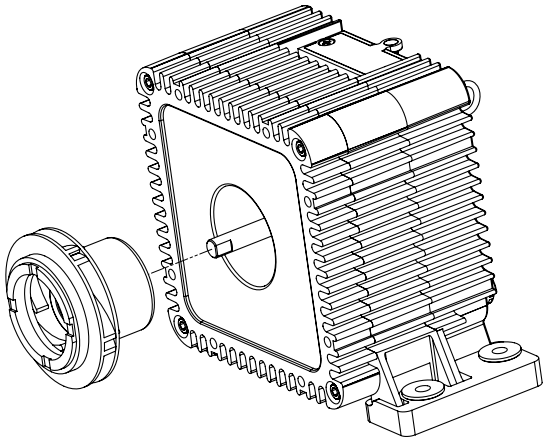

2. Put the thrust washer on the shaft and insert that end into the barrier of the motor.

3. Slide the impeller assembly onto the shaft, taking care not to pinch your fingers as the magnets can pull the impeller assembly into the motor quickly.

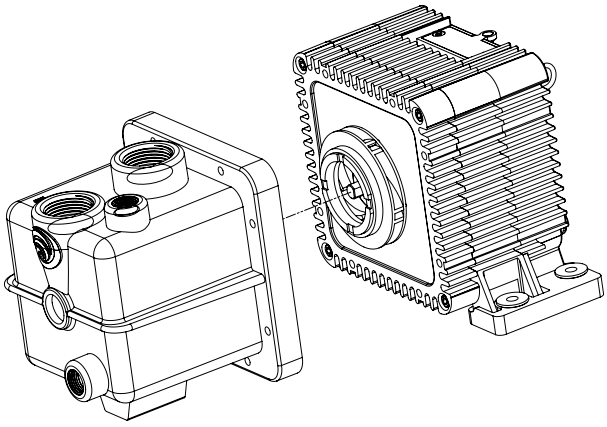

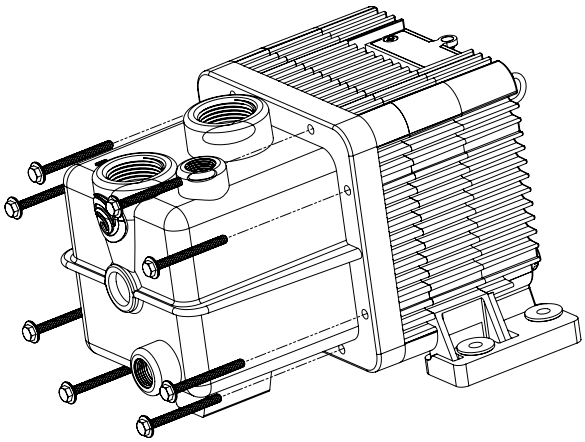

4. With the input and output ports on the top, slide the tank assembly onto the motor/ impeller. The shaft needs to line up and go into the shaft holder in the volute inside the tank. Keep the sides of the tank lined up with the sides of the motor. Move the tank slightly if needed to feel the shaft go into the shaft holder on the volute.

5. Insert the eight (8) tank bolts with washers. Push them all into their locations before tightening.

PUMP REASSEMBLY

6. Loosely tighten all eight bolts in an alternating pattern. (After the first bolt, go to the opposite side, followed by an adjacent side.) Continue until all bolts are finger tight.
7. Tighten all eight bolts to 15 in-lb (1.7 N-m). These are threaded into aluminum so do not overtighten to avoid stripping the threads.
8. Reinstall all plumbing.
9. Refill the pump tank. (See Pump Operation on page 13-15 for more information.)

O-RING/VOLUTE REPLACEMENT

If the volute was removed from the tank, or the tank/volute O-ring needs to be replaced, follow these instructions. Otherwise, the volute and O-ring can be left inside the tank during maintenance.

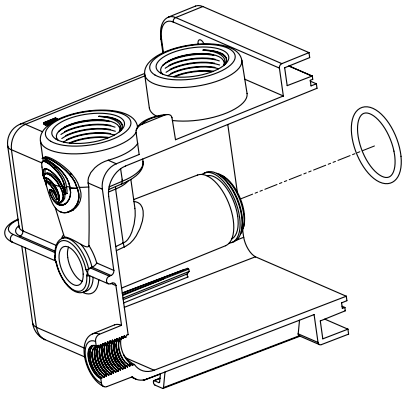

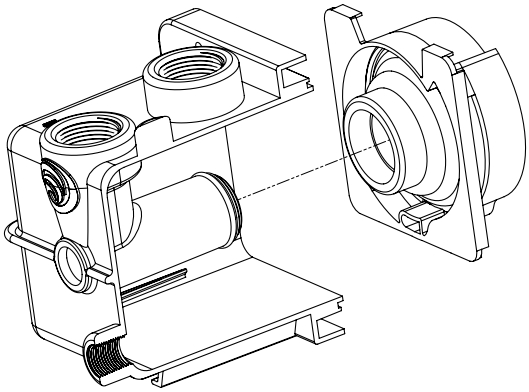

1. Ensure the tank/volute O-ring is properly seated on the internal tank pipe.

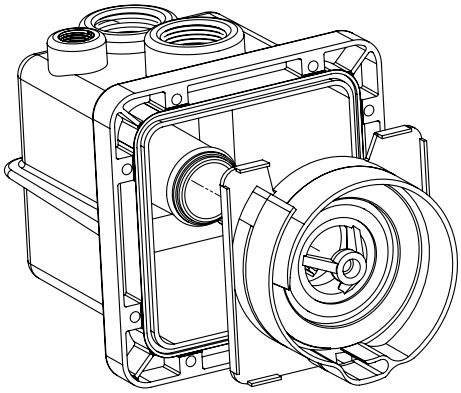

2. Insert the volute into the tank with the top notch toward the input and output of the tank.

3. Press the volute onto the O-ring and tank pipe. The O-ring is a very tight fit and will require significant force. Press until the back wall of the volute is at the same level as the tank wall.

WEAR COMPONENT REPLACEMENT

IMPELLER BUSHING REPLACEMENT

If the impeller bushing must be replaced, follow the instructions below to remove and install components.

1. With the front facing down, press the bushing out from the back.

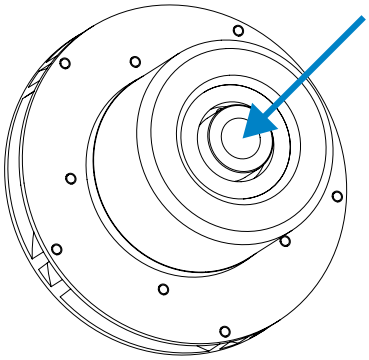

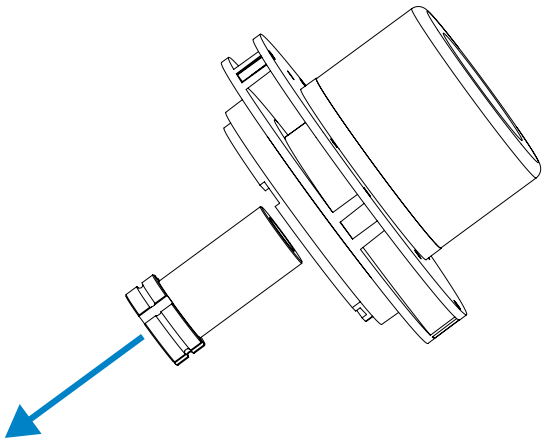

2. If needed, use an arbor press and a socket or other metal cylinder with a 13-15 mm diameter. If necessary, support the bottom of the impeller magnet with blocks to allow the bushing to fall out.

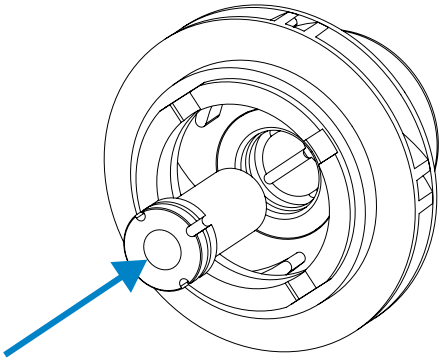

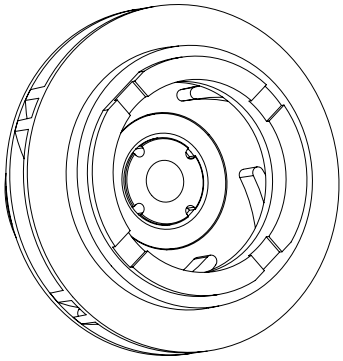

3. Insert the new bushing from the front of the impeller. Line up the slots in the bushing with the slots in the elastomer.

4. Press the bushing into the impeller until the front of the bushing is flush with the elastomer inside the impeller. Use an arbor press if needed.

WEAR COMPONENT REPLACEMENT

THRUST RING REPLACEMENT

If the impeller thrust ring must be replaced, follow the instructions below to remove and install components.

1. To remove the thrust ring, cut a small section out of the thrust ring using a side cutter.



2. Pull the thrust ring out of the impeller.
3. Line up the flat sides of the new replacement thrust ring with the impeller, ensuring the wear notches are facing up, and press down until the thrust ring is fully seated.



4. Follow the pump reassembly instructions (pages 19-20) to reassemble the pump.

PUMP DIAGRAM

SD02-SP

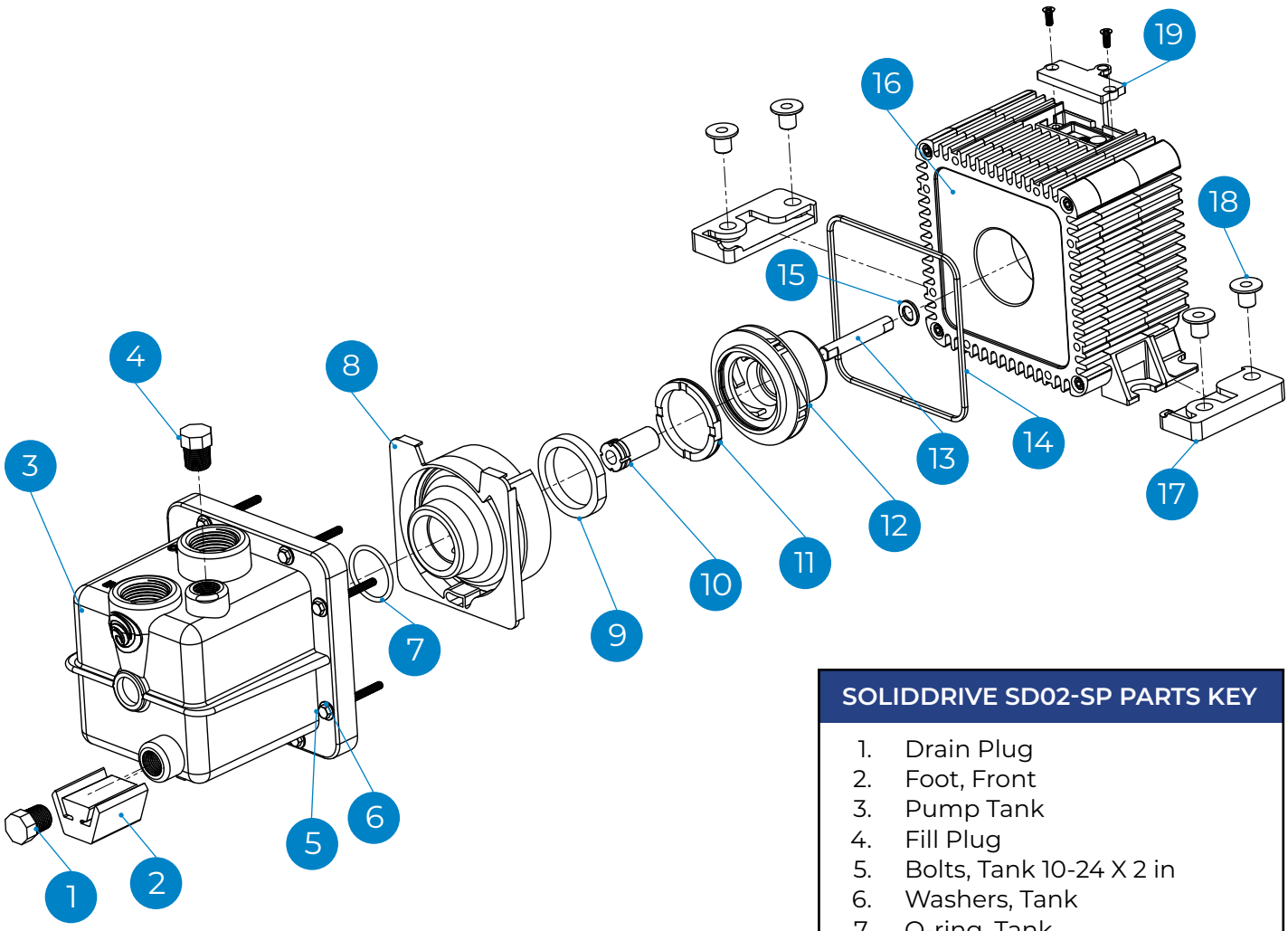

SOLIDDRIVE SD02-SP PARTS KEY

1. Drain Plug
2. Foot, Front
3. Pump Tank
4. Fill Plug
5. Bolts, Tank 10-24 X 2 in
6. Washers, Tank
7. O-ring, Tank
8. Volute
9. Thrust Ring, Volute
10. Bushing
11. Thrust Ring, Impeller
12. Impeller
13. Shaft
14. O-ring, Barrier
15. Thrust Ring, Shaft/Rear
16. Barrier/Motor
17. Isolation Feet, Rear
18. Isolation T-spacer
19. Access Cover – 8-32 7/16”

SPARE PARTS GUIDE

MODEL	WEAR KIT	IMPELLER KIT	WET END KIT	MOTOR KIT
SD02-SP	200081-060	200082-038	200082-188	200082-301

PART LIST

ITEM NO.	PART NAME	WEAR KIT	IMPELLER KIT	WET END KIT	MOTOR KIT
1	Drain Plug			●	
2	Foot, Front			●	
3	Pump Tank			●	
4	Fill Plug			●	
5	Bolts, Tank 10-24 X 2 in				
6	Washers, Tank			●	
7	O-ring, Tank	●		●	
8	Volute			●	
9	Thrust Ring, Volute			●	
10	Bushing	●	●	●	
11	Thrust Ring, Impeller	●	●	●	
12	Impeller		●	●	
13	Shaft			●	
14	O-ring, Barrier	●	●	●	
15	Thrust Ring, Shaft/Rear	●	●	●	
16	Barrier/Motor				●
17	Isolation Feet, Rear				●
18	Isolation T-spacer				●
19	Access Cover – 8-32 7/16”				●

STATUS LIGHTS & TROUBLESHOOTING

INDICATOR	DESCRIPTION	TROUBLE SHOOTING
Normal Operation		
Flashing Blue	Priming	
Solid Blue	Running no errors	
Solid Purple	Speed set to zero/off	
Reduced Speed		
Solid Red	Speed reduction due to temperature	Device has automatically reduced power. Reduce ambient temperature and/or fluid temperature if possible. Pump will continue to operate, just at a lower speed to reduce internal heat.
Errors		
Flashing Red (number of flashes)		
1	TEMP > MAX Priming	Reduce ambient temperature and/or fluid temperature if possible. Check for obstructions or issues with fluid flow.
2	TEMP > MAX Running	Reduce ambient temperature and/or fluid temperature if possible. Check for obstructions or issues with fluid flow.
3	Unable to Prime	System could not reach prime before primer timeout. Check to make sure the pump head is more than half full, add fluid via fill port. Check for issues with fluid flow or closed valves.
4	Run Dry Detected	System detected a run-dry event. Check for issues with fluid flow or closed valves.
7	System Error	Check for obstructions or issues with fluid flow. Check incoming power supply for correct voltage. Reset power and try again. If the error persists, call your ElectroSea Dealer or ElectroSea Service.
8	Critical High Voltage	Check incoming power supply for correct voltage. Reset power and try again. If the error persists, call your ElectroSea Dealer or ElectroSea Service.

STATUS LIGHTS & TROUBLESHOOTING

INDICATOR	DESCRIPTION	TROUBLE SHOOTING
9	High Voltage	Check incoming power supply for correct voltage. Reset power and try again. If the error persists, call your ElectroSea Dealer or ElectroSea Service.
10	Low Voltage	This can sometimes occur with a local brownout or quick loss in power. If there was a quick loss in power, the system will automatically retry. Otherwise, check incoming power supply for correct voltage. Reset power and try again. If the error persists, call your ElectroSea Dealer or ElectroSea Service.
11	Motor Flux	Make sure the motor is not in a large external magnetic field. Reset power and try again. If the error persists, call your ElectroSea Dealer or ElectroSea Service.
12	System Error	Check for obstructions or issues with fluid flow. Check incoming power supply for correct voltage. Reset power and try again. If the error persists, call your ElectroSea Dealer or ElectroSea Service.
13	Electrical Overheat	Check for obstructions or issues with fluid flow. Check incoming power supply for correct voltage. Reset power and try again. If the error persists, call your ElectroSea Dealer or ElectroSea Service.
14	Rotor Lock	Check for obstructions or issues with fluid flow. Make sure nothing is stuck in behind or around the impeller. If the error persists, call your ElectroSea Dealer or ElectroSea Service.
15	Phase Error	Reset power and try again. If the error persists, call your ElectroSea Dealer or ElectroSea Service.
16	Current Error	Check incoming power supply for correct voltage. Reset power and try again. If the error persists, call your ElectroSea Dealer or ElectroSea Service.

Contact ElectroSea for service or spare parts.

Service: support@electrosea.com | (561) 257-5739

Sales: sales@electrosea.com | (952) 475-8084

ELECTROSEA®

EXPERTS IN MARINE GROWTH PREVENTION SYSTEMS®

(888) 384-8881
(952) 475-8084

www.electrosea.com

© 2026 ElectroSea. All Rights Reserved.

ElectroSea's products are designed, assembled and quality-control tested at our headquarters in Minneapolis, Minnesota, USA.

Protected by one or more patents. For a comprehensive list of intellectual property and patent markings, visit www.electrosea.com/patents.

REV A